OPERATING INSTRUCTIONS FOR OVERFLOW VALVES

UVU (422, 424)

Engineering for a better world.

GEA.com

Table of contents

1 Overview of types **4**

2 Technical characteristics **4**

3 Operating Mediums **5**

3.1 Characteristics 5

4 Safety instructions **5**

5 Application **5**

6 Functional description **5**

7 Installation **6**

8 Replacing compression springs **6**

9 Maintenance **6**

9.1 Changing the O-ring S and PTFE ring 6

9.2 Checking and correcting the set pressure 7

10 Transport, storage and disposal **7**

11 Garantie **8**

12 Spare parts **8**

13 Marking **8**

14 Note on residual hazards in accordance with Pressure Equipment Directive 2014/68/EU **9**

1 Overview of types

Type DN 8 - DN 15

- 422 FL, 422 AE, 422 SE
- 424 FL, 424 AE, 424 SE

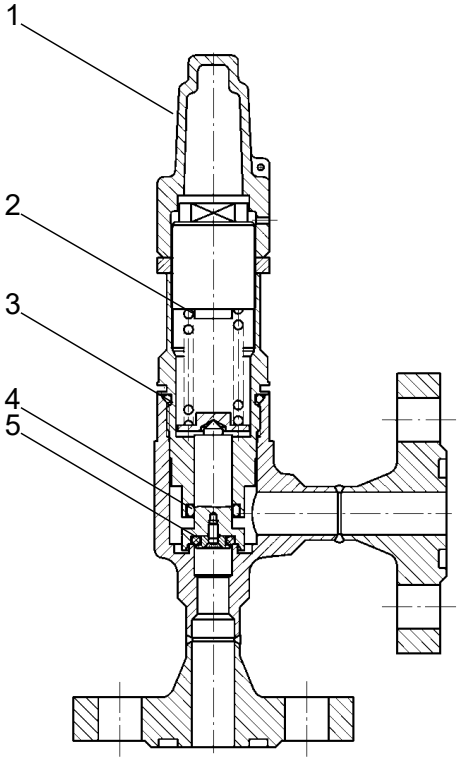

1	Cap	2	Compression spring
3	O-ring D	4	PTFE ring
5	O-ring S		

2 Technical characteristics

Selection acc. to AD-2000 Series W

- X6CrNiTi18-10
- X5CrNi18-10
- 1.4541
- 1.4301

or equivalent

PN	DN	TB (MWT) [C°]	UVUA 422				UVUB 424			
			-60	-10	+50	+180	-35	-10	+50	+100
25	8-15	PS (MWP) [bar]	18.7	25	25	25	18.7	25	25	25
40	8-15		30	40	40	40	30	40	40	40

Permissible ambient temperature range (°C) -50 to +55

3 Operating Mediums

Suitable for operation with refrigerants acc. to EN 378 Part 1, e.g. NH^3, R22, R134a or mixtures with refrigeration oil, as well as for neutral gaseous and liquid media and glycol-based cooling brine.

3.1 Characteristics

		8/10	10/10	15/15
for steam/gas D[-] measured at 25% back pressure		not	component-	Reviewed
Narrowest flow cross-section	[mm^2] [mm]	78 10	78 10	78 10
Pressure differential	p [bar]	5-28	5-28	5-28

- For spring pressure range, see spare parts list.
- Installation position: vertical and horizontal
- External leakage < 5 g
- Seat< 15 g refrigerant per year

4 Safety instructions

NOTICE

Danger from improper handling!

Risk of property damage.

- ▶ Do not install valves with transport or storage damage.
- ▶ Valves must be free of axial forces, bending moments, and torsional moments and must not serve as fixed points for pipework.
- ▶ In the event of oxy-fuel welding or brazing, the flame must not touch the valve.
- ▶ Keep the interior of the valves free of contamination.
- ▶ Opening or closing the valves with a valve wheel wrench or other lever-extending objects is not permissible.
- ▶ Only dismantle valves when the pipework is depressurised, evacuated, and sufficiently ventilated.

5 Application

AWP overflow valves are suitable for use in refrigerant circuits for industrial refrigeration systems as discharge valves. Overflow valves are safety devices for protecting the refrigeration system or its components against impermissible pressure stress (see also DIN 8975 Part 7). They comply with the equipment regulations of the Technical Inspection Associations -TÜV-.

6 Functional description

AWP overflow valves open independently of the back pressure. They close within a pressure reduction of 10% below the set point. (Response pressure = set pressure)

7 Installation

1. Clean pipework and system components before installation.
   NOTICE! The deviation from parallelism or perpendicularity of the welding ends or flange facings must not exceed 1°. Connecting flanges must be axially aligned. Components with transport and storage damage must not be installed. After removing the pipe plugs, the component can be welded in or installed. Observe the direction of flow (see arrow on nameplate).
2. **NOTICE! When using modern welding processes (e.g. TIG, CO2 arc welding), do not dismantle weld-in valves.**
3. Befestigungsschrauben und -muttern über Kreuz und gleichmäßig anziehen.

When discharging to atmosphere, the discharge pipes must be kept as short as possible and must not have any sharp bends. The bend radius must be at least 3 x OD (outside pipe diameter). When filling the oil or water seal, ensure that no oil or water enters the safety valves. Shut-off devices upstream and downstream of the safety valve are not permitted, with the exception of change-over valves. Provide sufficient space on the hood side for the disassembly of the hood.

8 Replacing compression springs

1. Unscrew the cap from the bonnet and loosen the clamping ring by turning it anti-clockwise.
2. Hold the adjustment screw with an open-ended spanner.

DN1	Cap 8-15	Clamping ring 8-15	Adjustment screw 8-15
SW	19	30	19

3. Unscrew the adjustment screw anti-clockwise and replace the compression spring according to the spare parts list.
4. Clean all individual parts before assembly. **NOTICE! Re-adjust the differential pressure [Δ p] after every compression spring replacement. A dwell time of 48 hours must be ensured between assembly, where the compression spring is pre-tensioned, and setting.**

9 Maintenance

AWP overflow valves operate maintenance-free. If functional defects occur, repair is possible. During the warranty period, repairs may only be carried out by AWP or, with their consent, by the system operator's trained maintenance personnel.

9.1 Changing the O-ring S and PTFE ring

1. Loosen the bonnet anti-clockwise.**NOTICE! The setting of the compression spring is not affected. Watch out for any residual refrigerant escaping. Leave the bonnet loose in the body until pressure is fully equalised. Only then unscrew completely.**

Bonnet	
DN 1	SW
8-15	30

2. Unscrew the bonnet and remove the internal parts attached to it.
3. Unscrew fixing screw (countersunk screw ISO 7046), remove and replace O-ring S (see spare parts list).

Screw ISO 7046	
DN 1	8-15
	M3 x 8

4. Remove the PTFE ring with a suitable tool (e.g. screwdriver) and carefully and evenly press in the new ring (see spare parts list) with your thumb.
5. When installing, moisten the stem slightly with cold-resistant oil (e.g. Anticorit 5F) and press carefully and evenly into the PTFE ring.
6. Clean all individual parts before assembly.
7. Then pull a new O-ring D onto the bonnet and screw in the bonnet.

Bonnet	
DN1	8-15
SW	30
Tightening torque [Nm]	70

9.2 Checking and correcting the set pressure

1. Unscrew cap from the bonnet and loosen clamping ring anti-clockwise.
2. Hold the adjustment screw with an open-ended spanner.

DN1	Cap	Clamping ring	Adjustment screw
	8-15	8-15	8-15
SW	19	30	19

3. Increase the differential pressure by turning the adjusting screw clockwise, and decrease the set pressure by turning it anti-clockwise. **NOTICE! Observe the set pressure range of the compression springs (see spare parts).**

Adjustment screw	
DN1	8-15
SW	19

4. Load the valve from the inlet side DN1 (with compressed air or a permitted operating medium equal to the set pressure) to check the set pressure.
   ⇨ The valve begins to open.
5. Trigger the valve 3x. (Set pressure tolerance [pe] = +3 %, -1 %)
6. Reduce pressure by 10% below the set pressure to check closing pressure (the valve must be closed).

10 Transport, storage and disposal

AWP components are transported protected against impact and covered with foil.

- Storage must take place in dry rooms.
- Ensure that the connection ports are sealed intact.
- Contamination of any kind must be kept away from the interior.
- The external surfaces are provided with a corrosion protection coating for dry storage at room temperature, which is effective for at least 1 year.
- The corrosion protection coating CELEROL® Reaktionsgrund 918 is a good adhesion promoter for 1- and 2-component top coats.
- Dismantle for disposal.
- Collect lubricants during dismantling. The materials must be separated from one another and disposed of in accordance with local regulations.

11 Garantie

Unless agreed otherwise, the statutory warranty provisions apply. For further information, please also refer to our General Terms and Conditions, available on our website **awpvalves.com**.

12 Spare parts

A spare parts order must contain the following information:

- Quantity
- Designation acc. to image for type
- Order number
- Nominal size of the valve
- Year of manufacture of the valve
- Response pressure

Type 424 AE, 424 FL, 424 SE O-ring S UVUB only	CR85	DN	Type: 422 AE, 422 FL, 422 SE O-ring S UVUA only	
Order number	Dimensions		Order number	Dimensions
73 75 74	⦰ 8 x 3	8-15	72 81 52	⦰ 8 x 3
PTFE ring		DN	O-ring D	CR75
Order number	Dimensions		Order number	Dimensions
72 84 15	⦰ 12 x 17 x 3.9	8-15	73 75 71	⦰ 26 x 3

DN 15	Compression spring	Pressure range pe [bar]
	56 20 04	5 - <8
	56 20 20	8- <12
	56 20 21	12 - <20
	56 20 23	20 - <28
	56 20 65	28 - <36
	56 20 66	36 - <45
	445 51.07.5 045 63 3	45 - <63

In case of doubt, please contact our Sales Support either via our website awpvalves.com/contact or by email to **info@awpvalves.com**. The most reliable method to correctly identify the required spare part is to send a photo of the nameplate on which the serial number of the valve is clearly visible.

13 Marking

The marking of AWP check valves is carried out in accordance with Pressure Equipment Directive 2014/68/EU.
Nameplate on body

PS [bar]	Max. permissible operating pressure
DN [mm]	Nominal size
DIN EN ISO 21922	Refrigerating valves, safety requirements, testing and marking

14 Note on residual hazards in accordance with Pressure Equipment Directive 2014/68/EU

Residual risks that cannot be avoided by the manufacturer exist due to:

NOTICE

- ▶ Do not loosen bonnets (without authorisation) during operation.
- ▶ Do not incorrectly assemble flange connections (inlet and outlet flanges, flanged bonnets).
- ▶ Contamination in the operating medium or improper handling of internal components can lead to damage to the seat seal.
- ▶ Non-compliance with the operating limits and manufacturer's regulations according to these operating instructions.

Engineering for a better world.

GEA.com

GEA AWP GmbH
Armaturenstr. 2
17291 Prenzlau
Germany
phone: +49 3984 8559-0
fax: +49 3984 8559-18
e-mail: info@awpvalves.com

Latest revision: 02.02.2026
©All rights reserved. Subject to modifications. Printed in Germany.