OPERATING INSTRUCTIONS FOR OVERFLOW VALVES

UVR (401, 402, 403, 404)

GEA Engineering for a better world.

GEA.com

Table of contents

1 Overview of types **4**

2 Technical characteristics **5**

3 Pressure/temperature operating limits **5**

4 Operating media **5**

4.1 Characteristics 6

5 Safety instructions **6**

6 Application **6**

7 Functional description **7**

8 Installation **7**

8.1 Setting 7

9 Maintenance **7**

9.1 Changing the stem seal 7

9.2 Replacing the flat sealing ring S and R / stem 8

10 Transport, storage and disposal **8**

11 Garantie **9**

12 Spare parts **9**

13 Marking **10**

14 Hinweis auf Restgefahren entsprechend Druckgeräterichtlinie 2014/68/EU **10**

1 Overview of types

401 00, 402 00
403 00, 404 00

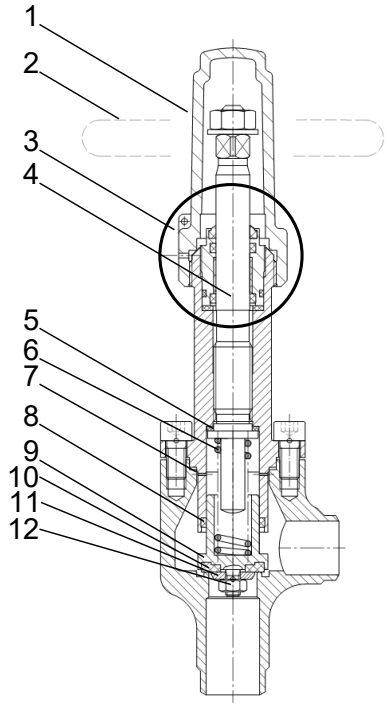

1	Cap	2	Handwheel
3	Threaded bush, complete	4	Stem
5	Flat sealing ring R	6	Compression spring
7	Flat sealing ring K	8	Damping ring
9	Valve disc	10	Flat sealing ring S
11	Washer	12	Nut

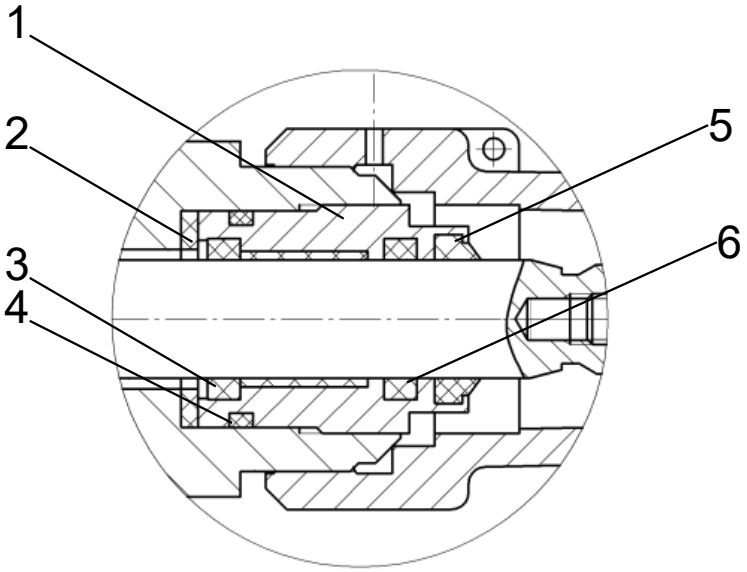

1	Threaded bush	2	Flat sealing ring SB

3	PTFE ring	4	O-ring B
5	Wiper ring	6	O-ring A

2 Technical characteristics

Body material	(Selection acc. to DIN EN12284, AD-2000 Series W)
Steel	P235GH, S355J2, S355J2
Low-temperature steel	P215NL, P255QL, P355NL1
NIRO	X5CrNi18-10 or equivalent

3 Pressure/temperature operating limits

When using screws of property class 8.8:

PN	TB (MWT) [°C]	-60[2)]	-40[2)]	-25[2)]	-10	+50	+150
25	PS (MWP) [bar]	6.25	12.5	18.7	25	25	25
40		10	20	30	40	40	40

When using screws of property class A2-70:

PN	TB (MWT) [°C]	-60[2)]	-60[1)]	-10	+50	+150
25	PS (MWP) [bar]	18.7	25	25	25	25
40		30	40	40	40	40
1) Load case I (TT, NIRO) 2) Load case II (acc. to AD2000-W10) (St)						
Permissible ambient temperature range: -50 to +50 °C						

4 Operating media

The valves described here are suitable for operation with refrigerants in accordance with EN 378 Part 1, e.g. NH^3, R22, R134a, R290 (propane). R507 or mixtures with refrigeration machine oil as well as for neutral, gaseous and liquid media and glycol-based brines.

4.1 Characteristics

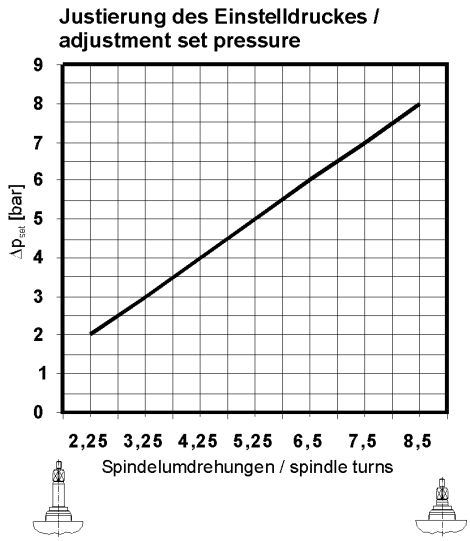

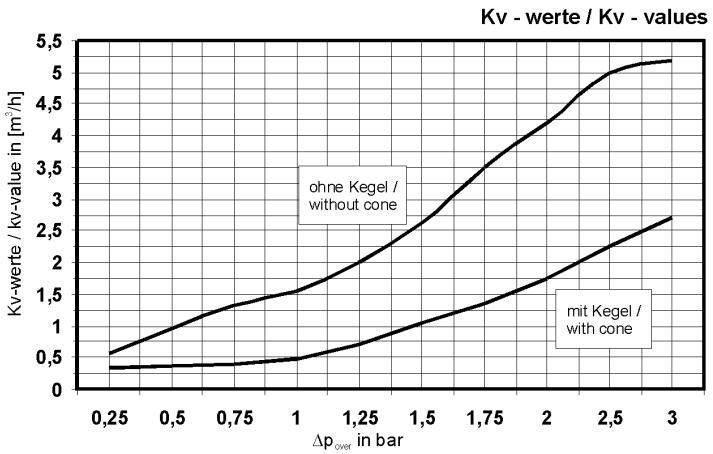

Pressure range of the spring: 2-8 bar. Installation system: vertical and horizontal
External leakage, seat <15g refrigerant per year

5 Safety instructions

NOTICE

Danger from improper handling!

Risk of property damage.

- ▶ Do not install valves with transport or storage damage.
- ▶ Valves must be free of axial forces, bending moments, and torsional moments and must not serve as fixed points for pipework.
- ▶ In the event of oxy-fuel welding or brazing, the flame must not touch the valve.
- ▶ Keep the interior of the valves free of contamination.
- ▶ Opening or closing the valves with a valve wheel wrench or other lever-extending objects is not permissible.
- ▶ Only dismantle valves when the pipework is depressurised, evacuated, and sufficiently ventilated.

6 Application

AWP overflow valves are suitable for use in refrigerant circuits for industrial refrigeration systems as discharge valves. Overflow valves are safety devices for protecting the refrigeration system or its components against impermissible pressure stress (see also DIN 8975 Part 7). They comply with the equipment regulations of the Technical Inspection Associations -TÜV-.

7 Functional description

AWP shut-off overflow valves UVR are automatic mechanically acting control devices with an adjustable differential pressure range of 2-8 bar. The valve can be closed using the stem. The valve is equipped with a PTFE back-seal to allow replacement of the stem seal during operation.
A damping system in the valve disc prevents "chattering", e.g. at low flow velocities. The valves are back-pressure dependent. Note: Response pressure = set pressure + external back pressure.
A PTFE flat gasket S ensures tightness at the seat.

8 Installation

1. Clean pipework and system components before installation.
   NOTICE! The deviation from parallelism or perpendicularity of the welding ends or flange facings must not exceed 1°. Connecting flanges must be axially aligned. Components with transport and storage damage must not be installed. After removing the pipe plugs, the component can be welded in or installed. Observe the direction of flow (see arrow on nameplate).
2. **NOTICE! When using modern welding processes (e.g. TIG, CO2 arc welding), do not dismantle weld-in valves.**
3. Befestigungsschrauben und -muttern über Kreuz und gleichmäßig anziehen.
4. When blowing off into the atmosphere, keep the discharge pipes as short as possible. They must not have any sharp bends. The bend radius must be at least 3 x OD (outside pipe diameter).
5. When filling the oil or water seal, ensure that no oil or water enters the safety valves.
6. Provide sufficient space on the bonnet / hood side for the disassembly of the bonnet / hood.

8.1 Setting

AWP overflow valves are set by turning the stem (SW 5). Turning the stem clockwise increases the response pressure and vice versa. Note: Setting can only be performed within the corresponding spring range (see Flow coefficient). Furthermore, corresponding compression springs must be obtained from the manufacturer. If back pressure is present, it must be subtracted from the response pressure and the valve must be set to the difference. Reduce the response pressure by turning the stem anti-clockwise.

9 Maintenance

AWP overflow valves operate maintenance-free. If functional defects occur, repair is possible. During the warranty period, repairs may only be carried out by AWP or, with their consent, by the system operator's trained maintenance personnel.

9.1 Changing the stem seal

1. Unscrew the cap! Use a wrench with the size specified in the following table.

DN	20
SW	24

2. Bring the stem to the uppermost position using the handwheel.
3. Unscrew the threaded bush anti-clockwise.**NOTICE! Watch out for any residual refrigerant escaping! Leave the threaded bush loose in the bonnet until pressure is completely equalised. Only unscrew it after this.**
4. Then unscrew it completely. To unscrew the threaded bush, use a wrench with the sizes specified in the following table:

DN	20

SW	22

5. Remove O-rings A, B, PTFE ring and the wiper ring and replace them with new ones.
6. Remove the flat gasket SB from the installation space in the bonnet.
7. Clean the stem and insert a new flat gasket SB into the bonnet.
8. Grease the threaded bush with refrigeration grease (e.g. RENOLIT UNITEMP 2) and tighten hand-tight.
9. To check for leaks, bring the stem to the middle position and brush the bonnet area with a foaming agent.

9.2 Replacing the flat sealing ring S and R / stem

1. Open the valve up to the stop and loosen the bonnet bolts. **NOTICE! Watch out for any residual refrigerant escaping! Leave the bonnet bolts loose in the bonnet until pressure is completely equalised. Only unscrew it after this.**

DN	20
M	8
ISO 4762	
SW	6

2. Unscrew bonnet bolts and pull out the bonnet including internal parts by the handwheel.
3. Unscrew the handwheel from the stem and unscrew the stem from the bonnet.
4. Remove and replace flat sealing ring R.
5. Remove the valve disc screws and compression spring from the body.
6. Remove the nut and washer or cone from the valve disc to loosen flat sealing ring S.
7. Insert new flat sealing ring S.
8. Attach the washer or cone and screw on the nut.
9. Clean all individual valve parts before assembly. Grease the stem and bonnet.
10. Then insert another flat sealing ring K.
.
11. Fit the bonnet and tighten evenly and in a crosswise pattern with the screws.
.

DN1	20
M	8x16
ISO 4762 8.8	
Tightening torque [Nm]	25

10 Transport, storage and disposal

AWP components are transported protected against impact and covered with foil.

- Storage must take place in dry rooms.
- Ensure that the connection ports are sealed intact.
- Contamination of any kind must be kept away from the interior.
- The external surfaces are provided with a corrosion protection coating for dry storage at room temperature, which is effective for at least 1 year.
- The corrosion protection coating CELEROL® Reaktionsgrund 918 is a good adhesion promoter for 1- and 2-component top coats.
- Dismantle for disposal.

– Collect lubricants during dismantling. The materials must be separated from one another and disposed of in accordance with local regulations.

11 Garantie

Unless agreed otherwise, the statutory warranty provisions apply. For further information, please also refer to our General Terms and Conditions, available on our website **awpvalves.com**.

12 Spare parts

O-ring A	CR75	DN	Type 454 ..	CR75
Order number	Dimensions		Order number	Dimensions
73 75 91	⌀ 14 x 3	20	73 75 22	⌀ 22 x 2

PTFE ring		DN	Wiper ring	NBR85
Order number	Dimensions		Order number	Dimensions
72 84 00	⌀ 14 x 19 x 3.9	20	73 98 55	14 x 20 x 5

Handwheel		DN	Cap	
Order number	Dimensions		Order number	Dimensions/
16301.08.5 280 00 3	⌀ 100 x 12/16	20	164 02.13.3 180 00 3	M36 x 2

Damping ring		DN	Compression spring	
Order number	Dimensions		Order number	Dimensions
72 84 12	⌀ 22 x 26.7 x 2.7	20	56 20 53	2 to 8

Flat sealing ring R	PTFE	DN	Flat sealing ring S	
Order number	Dimensions		Order number	
164 02.10.2 145 00 3	⌀ 16 x 21.6 x 2.0	20	163 01.10.2 144 00 3	⌀ 10.2 x 24.8 x 3

Flat sealing ring SB		DN	Flat sealing ring K	
Order number	Dimensions		Order number	Dimensions/
363 02.13.4 143 00 3	⌀ 14 x 25.5 x 2.0	20	163 01.10.4 146 00 3	⌀ 30.2 x 34.9 x 1.5

Threaded bush, complete	Stem	DN	Valve disc	
Order number	Type 402, 404		Order number	
163 00E13.8142 00 1	40200E11.8061002	20	40200E11.5125001	

In case of doubt, please contact our Sales Support either via our website awpvalves.com/contact or by email to **info@awpvalves.com**. The most reliable method to correctly identify the required spare part is to send a photo of the nameplate on which the serial number of the valve is clearly visible.

13 Marking

The marking of the valves is carried out in accordance with Pressure Equipment Directive 2014/68/EU.
Nameplate on body

PS [bar]	Max. permissible operating pressure
DN [mm]	Nominal size
DIN EN ISO 21922	Refrigerating valves, safety requirements, testing and marking

14 Hinweis auf Restgefahren entsprechend Druckgeräterichtlinie 2014/68/EU

Residual risks that cannot be avoided by the manufacturer exist due to:

NOTICE

- ▶ Do not loosen bonnets (without authorisation) during operation.
- ▶ Do not incorrectly assemble flange connections (inlet and outlet flanges, flanged bonnets).
- ▶ Contamination in the operating medium or improper handling of internal components can lead to damage to the seat seal.
- ▶ Non-compliance with the operating limits and manufacturer's regulations according to these operating instructions.

Engineering for a better world.

GEA.com

GEA AWP GmbH
Armaturenstr. 2
17291 Prenzlau
Germany
phone: +49 3984 8559-0
fax: +49 3984 8559-18
e-mail: info@awpvalves.com

Latest revision: 02.02.2026
©All rights reserved. Subject to modifications. Printed in Germany.