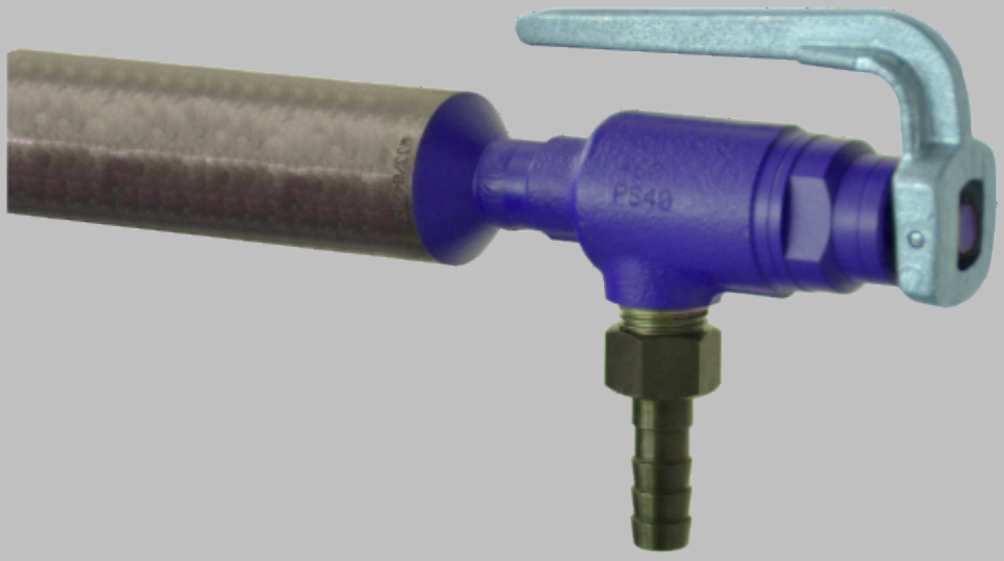


# OPERATING INSTRUCTIONS FOR QUICK CLOSING VALVES

SSO 460

Engineering for a better world.

GEA.com

# Table of contents


**1 Overview of types** ..... **4**

**2 Technical characteristics** ..... **4**

**3 Operating Mediums** ..... **4**

3.1 Opening pressure ..... 4

**4 Safety instructions** ..... **5**

**5 Application** ..... **5**

**6 Functional description** ..... **5**

**7 Installation** ..... **6**

**8 Maintenance** ..... **6**

8.1 Replacing seals ..... 6

**9 Transport, storage and disposal** ..... **7**

**10 Garantie** ..... **7**

**11 Spare parts** ..... **7**

**12 Marking** ..... **8**

**13 Note on residual hazards in accordance with Pressure Equipment Directive 2014/68/EU** ..... **8**

# 1 Overview of types

| SSO type 46060 | SSO type 46062 | SSO type 46064 |
|---|---|---|
| Inlet: Screwed End | Inlet: Welding end | Inlet: Flanged End |
| Outlet: Screwed End | Outlet: Screwed End | Outlet: Screwed End |

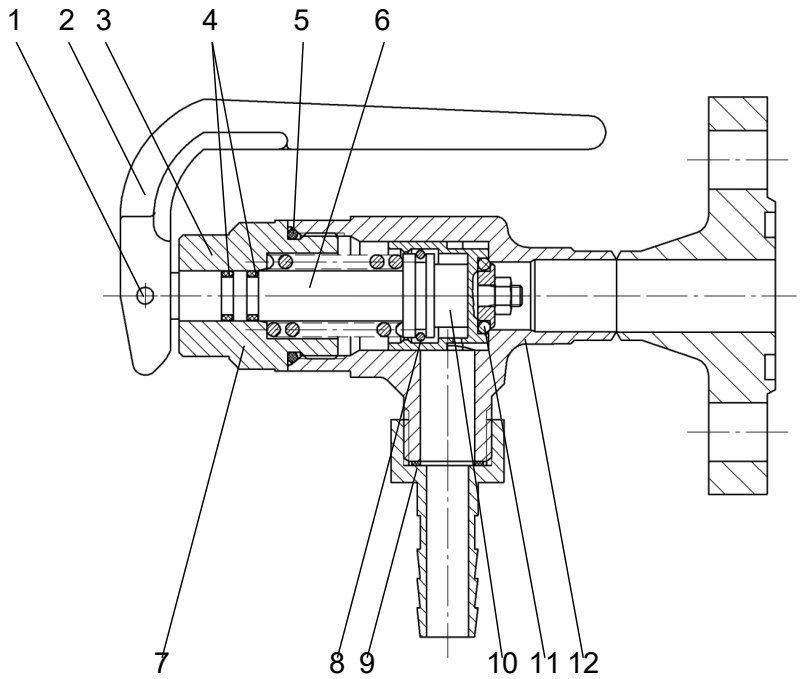


| | | | |
|---|---|---|---|
| 1 | Pin | 2 | Lever |
| 3 | Bonnet | 4 | Stem seal (O-ring SP) |
| 5 | Bonnet gasket (O-ring D) | 6 | Stem |
| 7 | Compression spring | 8 | Snap ring |
| 9 | Sealing ring | 10 | Sealing piston |
| 11 | Seat seal (O-ring S) | 12 | Body |

# 2 Technical characteristics

| Body material | Selection acc. to AD-2000 Series W |
|---|---|
| Steel | P235GH, S355J2 |
| Low-temperature steel | P215NL, P255QL, P355NL1 |
| NIRO | X5CrNi18-10 or equivalent |

# 3 Operating Mediums

Suitable for operation with refrigerants acc. to EN 378 Part 1, e.g. $NH^3$, R22, R134a or mixtures with refrigeration oil, as well as for neutral gaseous and liquid media and glycol-based cooling brine.

## 3.1 Opening pressure

– 26 – 28 bar


Latest revision: 02.02.2026. Subject to modifications.
The most recent version of this document is available on awpvalves.com/downloads/operating-instructions/

- 46 – 50 bar (customer-specific solution)
- Any installation position, the direction of flow must be observed.
- Leakage at valve seat: < 5 g refrigerant per year

# 4 Safety instructions

**⚠ WARNING**

**Verbrennungsgefahr bei extremen Temperaturen!**

Verbrennungen möglich.

▶ Ventil bei extremen Temperaturen mit Schutzhandschuhen bedienen.

**NOTICE**

**Danger from improper handling!**

Risk of property damage.

▶ Do not install valves with transport or storage damage.

▶ Valves must be free of axial forces, bending moments, and torsional moments and must not serve as fixed points for pipework.

▶ In the event of oxy-fuel welding or brazing, the flame must not touch the valve.

▶ Keep the interior of the valves free of contamination.

▶ Opening or closing the valves with a valve wheel wrench or other lever-extending objects is not permissible.

▶ Only dismantle valves when the pipework is depressurised, evacuated, and sufficiently ventilated.

**NOTICE**

**Danger from impermissible pressure rise!**

Risk of property damage.

▶ Avoid operating the valve against trapped liquid.

▶ Close shut-off valves in liquid lines in sequence towards a vessel with a gas volume.

# 5 Application

AWP quick-acting valves are suitable for installation in oil drain lines and particularly endangered system parts such as level indicators, sight glasses or flexible lines. Please note: (DIN 8975 - Part 6, Point 5.5) Install a shut-off valve (AVR / AVB) with a horizontally arranged stem in the oil drain line upstream of the quick-acting valve.

# 6 Functional description

AWP quick-acting valves are opened by pulling the lever. The system pressure present under the sealing piston supports the opening process. The compression spring is dimensioned such that the sealing piston opens automatically when the system pressure present is > maximum operating pressure. Releasing the lever closes the sealing piston. The seal at the valve seat is provided by O-ring S.

# 7 Installation

1. Clean pipework and system components before installation.
   **NOTICE! The deviation from parallelism or perpendicularity of the welding ends or flange facings must not exceed 1°. Connecting flanges must be axially aligned. Components with transport and storage damage must not be installed. After removing the pipe plugs, the component can be welded in or installed. Observe the direction of flow (see arrow on nameplate).**
2. Vor dem Schweißen die Spindel mittels eines Handrades in Mittelstellung bringen (Ventil halb geöffnet).
   **NOTICE! Bei Anwendung moderner Schweißverfahren (z. B. WIG, CO2-Lichtbogenschweißen) Ventile zum Einschweißen nicht demontieren.**
3. Befestigungsschrauben und -muttern über Kreuz und gleichmäßig anziehen.
4. After installation, check the smoothness of the stem throughout the entire lift range.
   ⇨ The thread for screwing on the cap must remain free of paint and must be greased (e.g. with RENOLIT UNITEMP 2).

To dismantle the valve insert, sufficient clearance must be kept free on the side where the bonnet is located: > 40 mm.

# 8 Maintenance

AWP quick-acting valves are maintenance-free. If functional defects occur, repair is possible. During the warranty period, repairs may only be carried out by the manufacturer (AWP) or, with their consent, by the system operator's trained maintenance personnel.

## 8.1 Replacing seals

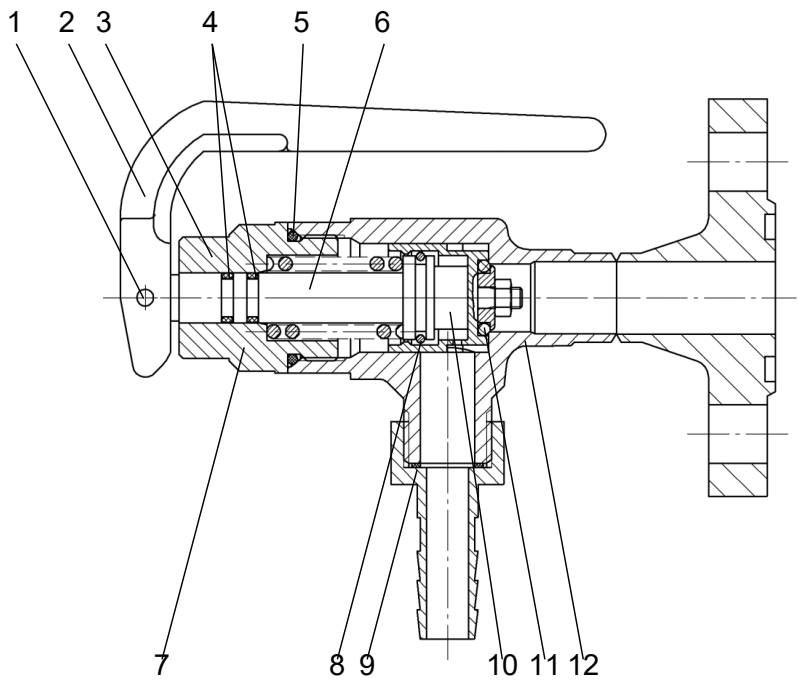


| | | | |
|---|---|---|---|
| 1 | Pin | 2 | Lever |
| 3 | Bonnet | 4 | Stem seal (O-ring SP) |
| 5 | Bonnet gasket (O-ring D) | 6 | Stem |

| | | | |
|---|---|---|---|
| 7 | Compression spring | 8 | Snap ring |
| 9 | Sealing ring | 10 | Sealing piston |
| 11 | Seat seal (O-ring S) | 12 | Body |

1. Knock out pin (item 1) and remove lever (item 2).
2. Unscrew bonnet (item 3) carefully anti-clockwise using an open-ended wrench size 30. **NOTICE! The bonnet is under slight tension due to the compression spring.**
3. Remove stem (item 6) together with the compression spring (item 7) and sealing piston (item 10) from the body (item 12).
4. Remove all O-rings.
5. Clean parts carefully. Do not use sharp objects.
6. Coat O-ring areas with a little low-temperature grease (e.g. RENOLIT UNITEMP 2) and install new O-rings.
7. Lightly grease the body interior, sealing piston and stem in the area of the O-rings SP (item 4).
8. Insert stem together with compression spring and sealing piston into the body.
9. Slide the bonnet carefully over the stem and screw into the body under slight pressure with a clockwise turn.
10. Place the lever on the stem so that the pin can be knocked in. Finally, perform a functional check.

.

# 9 Transport, storage and disposal

AWP components are transported protected against impact and covered with foil.

- Storage must take place in dry rooms.
- Ensure that the connection ports are sealed intact.
- Contamination of any kind must be kept away from the interior.
- The external surfaces are provided with a corrosion protection coating for dry storage at room temperature, which is effective for at least 1 year.
- The corrosion protection coating CELEROL® Reaktionsgrund 918 is a good adhesion promoter for 1- and 2-component top coats.
- Dismantle for disposal.
- Collect lubricants during dismantling. The materials must be separated from one another and disposed of in accordance with local regulations.

# 10 Garantie

Unless agreed otherwise, the statutory warranty provisions apply. For further information, please also refer to our General Terms and Conditions, available on our website **awpvalves.com**.

# 11 Spare parts

A seal kit contains the following O-rings shown in the **Overview of types [▶ 4]**:

- O-ring SP
- Bonnet gasket O-ring D
- Seat seal O-ring S

A valve insert contains all internal parts including seals i.e. stem, compression spring, sealing piston plus bonnet with lever.

| Valve insert | Seal kit (CR) | | Sealing ring (item 9) (AL) |
|---|---|---|---|
| | Opening pressure 26-28 bar | Opening pressure 46-50 bar | |

| Valve insert | Seal kit (CR) | | Sealing ring (item 9) (AL) |
|---|---|---|---|
| 46000B10.5110001 | 44355.10.5/00019 | 44355E10.5/00019 | 737483 |

In case of doubt, please contact our Sales Support either via our website awpvalves.com/contact or by email to **info@awpvalves.com**. The most reliable method to correctly identify the required spare part is to send a photo of the nameplate on which the serial number of the valve is clearly visible.

# 12 Marking

The marking of AWP quick-acting valves is carried out by stamping on the valve body The following information is stamped:

- Type no. (460)
- Pressure rating (PS)
- Flow direction (arrow)

Serial numbers are not indicated on valves up to and including DN 20 as standard.

# 13 Note on residual hazards in accordance with Pressure Equipment Directive 2014/68/EU

Residual risks that cannot be avoided by the manufacturer exist due to:

**NOTICE**

- ▶ Do not loosen bonnets (without authorisation) during operation.
- ▶ Do not incorrectly assemble flange connections (inlet and outlet flanges, flanged bonnets).
- ▶ Contamination in the operating medium or improper handling of internal components can lead to damage to the seat seal.
- ▶ Non-compliance with the operating limits and manufacturer's regulations according to these operating instructions.

Engineering for a better world.

GEA.com

**GEA AWP GmbH**
Armaturenstr. 2
17291 Prenzlau
Germany
phone: +49 3984 8559-0
fax: +49 3984 8559-18
e-mail: info@awpvalves.com

Latest revision: 02.02.2026
©All rights reserved. Subject to modifications. Printed in Germany.