AWPVALVES.com

CHECK VALVES FOR HEATING TECHNOLOGIES

RV, RVA, RVAK, RVZ

05.02.2026

Table of contents

1 RV / RVA / RVAK / RVZ 6
2 RV / RVA / RVAK / RVZ 7
3 RV materials 9
4 RV D AE HT 10
5 RV D AE NIRO HT 12
6 RV E AE HT 14
7 RV E AE NIRO HT 16
8 RV D FL HT 18
9 RV D FL NIRO HT 20
10 RV E FL HT 22
11 RV E FL NIRO HT 24
12 RV D LE HT 26
13 RV D LE NIRO HT 28
14 RV E LE HT 30
15 RV E LE NIRO HT 32
16 RV D SE HT 34
17 RV D SE NIRO HT 35
18 RV E SE HT 36
19 RV E SE NIRO HT 37
20 RVA materials 38
21 RVA D AE HT / RVA D AE DV HT 40
22 RVA D AE NIRO HT / RVA D AE DV NIRO HT 42
23 RVA E AE HT / RVA E AE DV HT 44
24 RVA E AE NIRO HT / RVA E AE DV NIRO HT 46
25 RVA D FL / RVA D FL DV 48
26 RVA D FL NIRO HT / RVA D FL DV NIRO HT 50
27 RVA E FL HT / RVA E FL DV HT 52
28 RVA E FL NIRO HT / RVA E FL DV NIRO HT 54
29 RVA D LE HT / RVA D LE DV HT 56
30 RVA D LE NIRO HT / RVA D LE DV NIRO HT 58
31 RVA E LE HT / RVA E LE DV HT 60

32 RVA E LE NIRO HT / RVA E LE DV NIRO HT 62
33 RVA D SE HT 64
34 RVA D SE NIRO HT 65
35 RVA E SE HT 66
36 RVA E SE NIRO HT 67
37 RVAK materials 68
38 RVAK D AE HT / RVAK D AE DV HT 70
39 RVAK D AE NIRO HT / RVAK D AE DV NIRO HT 72
40 RVAK E AE HT / RVAK E AE DV HT 74
41 RVAK E AE NIRO HT / RVAK E AE DV NIRO HT 76
42 RVAK D FL HT / RVAK D FL DV HT 78
43 RVAK D FL NIRO HT / RVAK D FL DV NIRO HT 80
44 RVAK E FL HT / RVAK E FL DV HT 82
45 RVAK E FL NIRO HT / RVAK E FL DV NIRO HT 84
46 RVAK D LE HT / RVAK D LE DV HT 86
47 RVAK D LE NIRO HT / RVAK D LE DV NIRO HT 88
48 RVAK E LE HT / RVAK E LE DV HT 90
49 RVAK E LE NIRO HT / RVAK E LE DV NIRO HT 92
50 RVAK D SE HT 94
51 RVAK D SE NIRO HT 95
52 RVAK E SE HT 96
53 RVAK E SE NIRO HT 97
54 RVZ materials 98
55 RVZ FL HT 99
56 RVZ FL NIRO HT 101
57 RVZ materials 103
58 RVZ HGA FL HT 104
59 RVZ HGA FL NIRO HT 106
60 Appendix 108
61 Damping in check valves 109
62 Valve stem sealing system 110
63 Insulation thicknesses 111
64 HR / K 112

Latest revision: 05.02.2026. Subject to modifications.
The most recent version of this document is available on awpvalves.com/downloads/

65 Comparison of European / American materials 114
66 Coding of connections for small and service valves 115
67 Accessories for AVR, HRAR, RV, RVA, RVAK, SS, UVA 117
68 Welding neck flanges - DIN 2634/2635 118
69 Welding neck flanges - DIN 2634/2636/2637 120
70 Welding neck flanges - DIN EN 1092-1 122
71 Welding neck flanges - DIN EN 1092-1 124
72 Welding neck flanges - ANSI B16.5 raised face 126
73 Welding neck flanges - AWP 128
74 Legal notices 130

1 RV / RVA / RVAK / RVZ

RV: Check valve - with damping
HT: Temperature up to +200°C

RV	Connection	Form	Material	Valve type
RV	Materials			
RV **PS25 / PS40 / PS63**	Welding ends	Straight-way	St	**RV D AE**
			NIRO	**RV D AE NIRO**
		Angle	St	**RV E AE**
			NIRO	**RV E AE NIRO**
	Flanged ends	Straight-way	St	**RV D FL**
			NIRO	**RV E FL NIRO**
		Angle	St	**RV E FL**
			NIRO	**RV E FL NIRO**
	Soldering ends	Straight-way	St	**RV D LE**
			NIRO	**RV D LE NIRO**
		Angle	St	**RV E LE**
			NIRO	**RV E LE NIRO**
	Screwed ends	Straight-way	St	**RV D SE**
			NIRO	**RV D SE NIRO**
		Angle	St	**RV E SE**
			NIRO	**RV E SE NIRO**

RVA: shut-off check valve - damping, stem seal spring-energised PTFE ring
HT: Temperature up to +200°C

RVA	Connection	Form	Material	Valve type
RVA	Materials			
RVA **PS25 / PS40 / PS63**	Welding ends	Straight-way	St	**RVA D AE / DV**
			NIRO	**RVA D AE NIRO / DV**
		Angle	St	**RVA E AE / DV**
			NIRO	**RVA E AE NIRO / DV**
	Flanged ends	Straight-way	St	**RVA D FL / DV**
			NIRO	**RVA D FL NIRO / DV**
		Angle	St	**RVA E FL / DV**
			NIRO	**RVA E FL NIRO / DV**
	Soldering ends	Straight-way	St	**RVA D LE / DV**
			NIRO	**RVA D LE NIRO / DV**
		Angle	St	**RVA E LE / DV**
			NIRO	**RVA E LE NIRO / DV**
	Screwed ends	Straight-way	St	**RVA D SE**
			NIRO	**RVA D SE NIRO**
		Angle	St	**RVA E SE**
			NIRO	**RVA E SE NIRO**

DV = optional bonnet extension, St = steel, NIRO = stainless steel

2 RV / RVA / RVAK / RVZ

HT: Temperature up to +200°C

RVAK: shut-off check valve - regulating cone, damping, stem seal spring-energised PTFE ring

RVAK	Connection	Form	Material	Valve type
RVAK	Materials			
RVAK PS25 / PS40 / PS63	Welding ends	Straight-way	St	RVAK D AE / DV
			NIRO	RVAK D AE NIRO / DV
		Angle	St	RVAK E AE / DV
			NIRO	RVAK E AE NIRO / DV
	Flanged ends	Straight-way	St	RVAK D FL / DV
			NIRO	RVAK D FL NIRO / DV
		Angle	St	RVAK E FL / DV
			NIRO	RVAK E FL NIRO / DV
	Soldering ends	Straight-way	St	RVAK D LE / DV
			NIRO	RVAK D LE NIRO / DV
		Angle	St	RVAK E LE / DV
			NIRO	RVAK E LE NIRO / DV
	Screwed ends	Straight-way	St	RVAK D SE
			NIRO	RVAK D SE NIRO
		Angle	St	RVAK E SE
			NIRO	RVAK E SE NIRO

RVZ: Check valve - with damping - with/without hot gas connection

RVZ	Connection	Form	Material	Valve type
RVZ	Material			
RVZ PS25 / PS40 / PS63	Flanged ends	Straight-way	St	RVZ FL
			NIRO	RVZ FL NIRO
RVZ HGA	Material			
RVZ HGA PS25 / PS40 / PS63	Flanged ends	Straight-way	St	RVZ HGA FL
			NIRO	RVZ HGA FL NIRO
Information	Damping in check valves			
	Valve stem sealing system			
	Insulation thicknesses			
	HR / K Handwheel / Cap			
	Comparison of European/American materials			
	Coding of connections for small and service valves			
	Accessories for HVR, HRAR, RV, RVA, RVAK, SS, UVA			
	DIN-FL welding neck flanges - DIN			
	EN-FL welding neck flanges - EN			
	ANSI-FL welding neck flanges - smooth			
	AWP-FL welding neck flanges - AWP			
	Legal notices			

DV = optional bonnet extension, St = steel NIRO = stainless steel

Latest revision: 05.02.2026. Subject to modifications.

The most recent version of this document is available on awpvalves.com/downloads/

3 RV materials

Designation and materials
RV HT - check valve

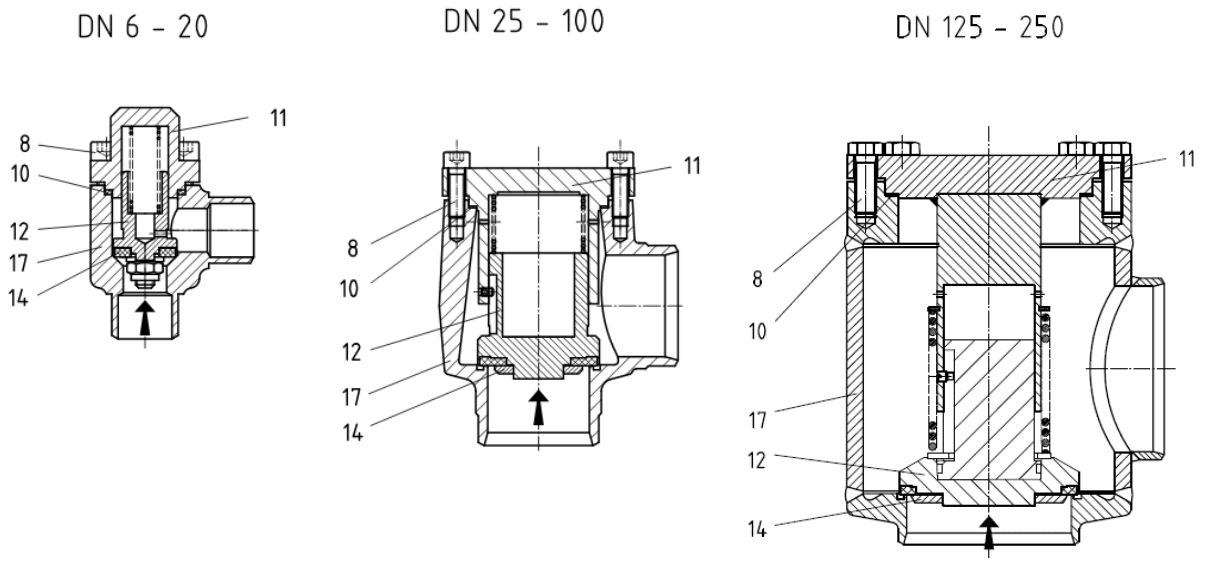

	Part	Material for steel valves	Material for stainless steel valves
8	Bonnet screw	8.8	A2-70
10	Flat sealing ring for bonnet	AFM30	AFM30
11	Bonnet	S355J2 1.0577	X8CrNiS18-9 1.4305 X5CrNi18-10 1.4301 X2CrNi19-11 1.4306
12	Valve disc	S355J2 1.0577	X8CrNiS18-9 1.4305 X5CrNi18-10 1.4301
14	Flat sealing ring for valve disc	PTFE	PTFE
17	Body	P235GH 1.0345 S355J2 1.0577 P355N 1.0562	X5CrNi18-10 1.4301

4 RV D AE HT

D: Straight-way, **AE:** Welding ends, **HT:** Temperature up to +200°C
RV steel check valve - with damping for natural gases and liquids (e.g. NH3, CO2) and non-corrosive media according to EN 378-1
Optional: LKL - linear ball bearing from DN 40-200

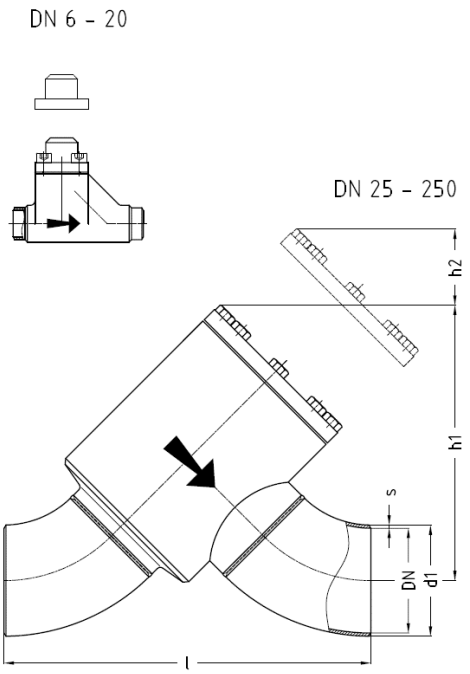

Pressure / temperature operating limits:
PS: Max. permissible operating pressure in bar
TS: Permissible operating temperature in °C associated with the permissible operating pressures (PS)
PN: Nominal pressure rating

DN / INCH	PN	-10	+50	+200	TS [°C]
DN 6...20 1/8"...3/4"	PN25	25	25	25	PS [bar]
	PN40	40	40	40	PS [bar]
	PN63	63	63	63	PS [bar]
DN 25...200 1"...8"	PN25	25	25	25	PS [bar]
	PN40	40	40	40	PS [bar]
	PN63	63	63	63	PS [bar]
DN 250 10"	PN25	25	25	25	PS [bar]
	PN40	40	40	40	PS [bar]

Nominal size:		Welding ends acc. to:									PN63, DN6-15:			
		ISO Series 1			ISO Series 2		ANSI Sched 40		ANSI Sched 80		Dimensions l to h2 same as for DN20			
DN	INCH	d1	s1)	s2)	d1	s	d1	s	d1	s	l	h1	h1*)	h2
6	1/8"	10.2	1.6	1.6			10.3	1.7	10.3	2.4	84	70		35
8	1/4"	13.5	1.8	1.8			13.7	2.2	13.7	3.0	84	70		35
10	3/8"	17.2	1.8	1.8	15.0	2.5	17.1	2.3	17.1	3.2	84	70		35

Nominal size:		Welding ends acc. to:									PN63, DN6-15:			
15	1/2"	21.3	2.0	2.0	20.0	2.5	21.3	2.8	21.3	3.7	84	70		35
20	3/4"	26.9	2.3	2.6	25.0	2.5	26.7	2.9	26.7	3.9	110	73		45
25	1"	33.7	2.6	2.6	32.0	3.0	33.4	3.4	33.4	4.5	140	127		50
32	1 1/4"	42.4	2.6	2.9	38.0	3.0	42.2	3.6	42.2	4.8	154	130		50
40	1 1/2"	48.3	2.6	2.9	45.0	3.0	48.3	3.7	48.3	5.1	156	142		65
50	2"	60.3	2.9	2.9	57.0	3.2	60.3	3.9			182	147		65
65	2 1/2"	76.1	2.9	3.2	76.1	3.6	73.0	5.2			256	191		75
80	3"	88.9	3.2	3.6	88.9	4.0	88.9	5.5			304	245		115
100	4"	114.3	3.6	4.0	108.0	4.0	114.3	6.0			386	286		125
125	5"	139.7	4.0	4.5	133.0	4.0	141.3	6.6			461	351	354	180
150	6"	168.3	4.5	5.6	159.0	4.5	168.3	7.1			537	394		210
200	8"	219.1	6.3	7.1			219.1	8.2			708	522		265
250	10"	273.0	7.1				273.0	9.3			875	620		300

Table 1: Dimensions

1) PN25 / PN40 2) PN63 *) only for DN125 PN63, h2 = dismantling dimension

5 RV D AE NIRO HT

D: Straight-way, **AE:** Welding ends, **HT:** Temperature up to +200°C
RV stainless steel check valve - with damping for natural gases and liquids (e.g. NH3, CO2) and non-corrosive media according to EN 378-1
Optional: LKL - linear ball bearing from DN 40-200

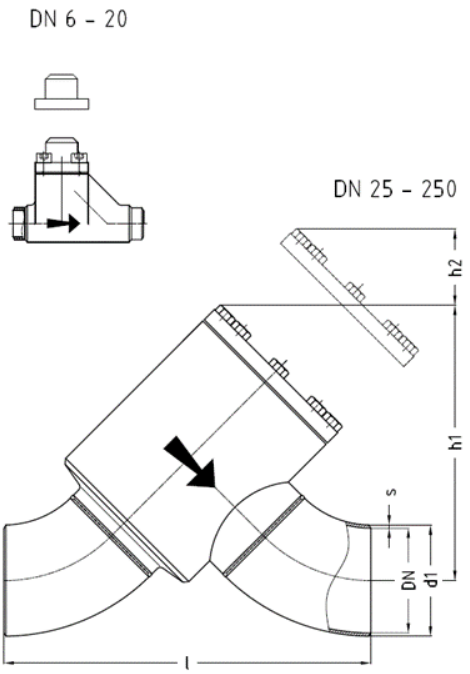

Pressure / temperature operating limits:
PS: Max. permissible operating pressure in bar
TS: Permissible operating temperature in °C associated with the permissible operating pressures (PS)
PN: Nominal pressure rating

DN / INCH	PN	-10	+50	+200	TS [°C]
DN 6...20 1/8"...3/4"	PN25	25	25	25	PS [bar]
	PN40	40	40	40	PS [bar]
	PN63	63	63	63	PS [bar]
DN 25...200 1"...8"	PN25	25	25	25	PS [bar]
	PN40	40	40	40	PS [bar]
	PN63	63	63	63	PS [bar]
DN 250 10"	PN25	25	25	25	PS [bar]
	PN40	40	40	40	PS [bar]

Nominal size:		Welding ends acc. to:									PN40/63, DN6-15:			
		ISO Series 1			ISO Series 2		ANSI Sched 40		ANSI Sched 80		Dimensions l to h2 same as for DN20			
DN	INCH	d1	s1)	s2)	d1	s	d1	s	d1	s	l	h1	h1*)	h2
6	1/8"	10.2	1.6	1.6			10.3	1.7	10.3	2.4	84	70		35
8	1/4"	13.5	1.8	1.8			13.7	2.2	13.7	3.0	84	70		35
10	3/8"	17.2	1.8	1.8	15.0	2.5	17.1	2.3	17.1	3.2	84	70		35
15	1/2"	21.3	2.0	2.0	20.0	2.5	21.3	2.8	21.3	3.7	84	70		35

Nominal size:		Welding ends acc. to:									PN40/63, DN6-15:			
20	3/4″	26.9	2.3	2.6	25.0	2.5	26.7	2.9	26.7	3.9	110	73		45
25	1″	33.7	2.6	2.6	32.0	3.0	33.4	3.4	33.4	4.5	140	127		50
32	1 1/4″	42.4	2.6	2.9	38.0	3.0	42.2	3.6	42.2	4.8	154	130		50
40	1 1/2″	48.3	2.6	2.9	45.0	3.0	48.3	3.7	48.3	5.1	156	142		65
50	2″	60.3	2.9	2.9	57.0	3.2	60.3	3.9			182	147		65
65	2 1/2″	76.1	2.9	3.2	76.1	3.6	73.0	5.2			256	191		75
80	3″	88.9	3.2	3.6	88.9	4.0	88.9	5.5			304	245		115
100	4″	114.3	3.6	4.0	108.0	4.0	114.3	6.0			386	286		125
125	5″	139.7	4.0	4.5	133.0	4.0	141.3	6.6			461	351	354	180
150	6″	168.3	4.5	5.6	159.0	4.5	168.3	7.1			537	394		210
200	8″	219.1	6.3	7.1			219.1	8.2			708	522		265
250	10″	273.0	7.1				273.0	9.3			875	620		300

Table 2: Dimensions

1) PN25 / PN40 2) PN63 *) only for DN125 PN63, h2 = dismantling dimension

6 RV E AE HT

E: Angle, **AE:** Welding ends, **HT:** Temperature up to +200°C
RV steel check valve - with damping for natural gases and liquids (e.g. NH3, CO2) and non-corrosive media according to EN 378-1
Optional: LKL - linear ball bearing from DN 40-200

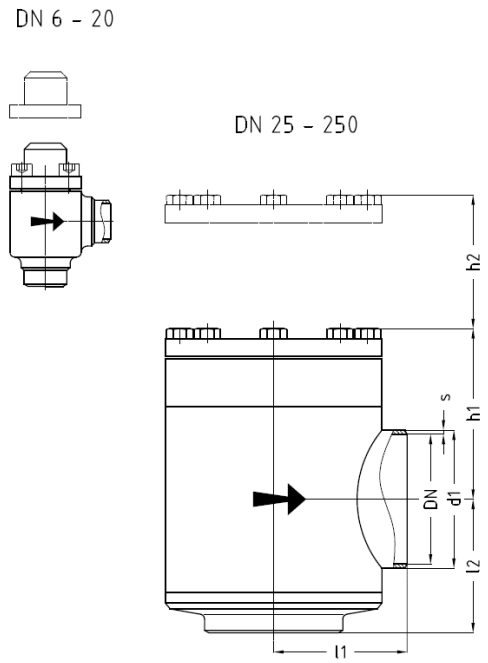

Pressure / temperature operating limits:
PS: Max. permissible operating pressure in bar
TS: Permissible operating temperature in °C associated with the permissible operating pressures (PS)
PN: Nominal pressure rating

DN / INCH	PN	-10	+50	+200	TS [°C]
DN 6...20 1/8"...3/4"	PN25	25	25	25	PS [bar]
	PN40	40	40	40	PS [bar]
	PN63	63	63	63	PS [bar]
DN 25...200 1"...8"	PN25	25	25	25	PS [bar]
	PN40	40	40	40	PS [bar]
	PN63	63	63	63	PS [bar]
DN 250 10"	PN25	25	25	25	PS [bar]
	PN40	40	40	40	PS [bar]

Nominal size:		Welding ends acc. to:									PN63, DN6-15:				
		ISO Series 1			ISO Series 2		ANSI Sched 40		ANSI Sched 80		Dimensions l1 to h2 same as for DN20				
DN	INCH	d1	s1)	s2)	d1	s	d1	s	d1	s	l1	l2	h1	h1*)	h2
6	1/8"	10.2	1.6	1.6			10.3	1.7	10.3	2.4	35	35	40		35
8	1/4"	13.5	1.8	1.8			13.7	2.2	13.7	3.0	35	35	40		35
10	3/8"	17.2	1.8	1.8	15.0	2.5	17.1	2.3	17.1	3.2	35	35	40		35

Nominal size:		Welding ends acc. to:									PN63, DN6-15:				
15	1/2"	21.3	2.0	2.0	20.0	2.5	21.3	2.8	21.3	3.7	35	35	40		35
20	3/4"	26.9	2.3	2.6	25.0	2.5	26.7	2.9	26.7	3.9	41	41	50		45
25	1"	33.7	2.6	2.6	32.0	3.0	33.4	3.4	33.4	4.5	60	60	66		70
32	1 1/4"	42.4	2.6	2.9	38.0	3.0	42.2	3.6	42.2	4.8	60	60	66		70
40	1 1/2"	48.3	2.6	2.9	45.0	3.0	48.3	3.7	48.3	5.1	70	70	77		90
50	2"	60.3	2.9	2.9	57.0	3.2	60.3	3.9			70	70	77		90
65	2 1/2"	76.1	2.9	3.2	76.1	3.6	73.0	5.2			85	85	89		110
80	3"	88.9	3.2	3.6	88.9	4.0	88.9	5.5			100	100	129		155
100	4"	114.3	3.6	4.0	108.0	4.0	114.3	6.0			120	120	137		170
125	5"	139.7	4.0	4.5	133.0	4.0	141.3	6.6			135	135	175	180	250
150	6"	168.3	4.5	5.6	159.0	4.5	168.3	7.1			150	150	192		280
200	8"	219.1	6.3	7.1			219.1	8.2			195	195	256		380
250	10"	273.0	7.1				273.0	9.3			236	236	278		420

Table 3: Dimensions

1) PN25 / PN40 2) PN63 *) only for DN125 PN63, h2 = dismantling dimension

7 RV E AE NIRO HT

E: Angle, **AE:** Welding ends, **HT:** Temperature up to +200°C
RV stainless steel check valve - with damping for natural gases and liquids (e.g. NH3, CO2) and non-corrosive media according to EN 378-1
Optional: LKL - linear ball bearing from DN 40-200

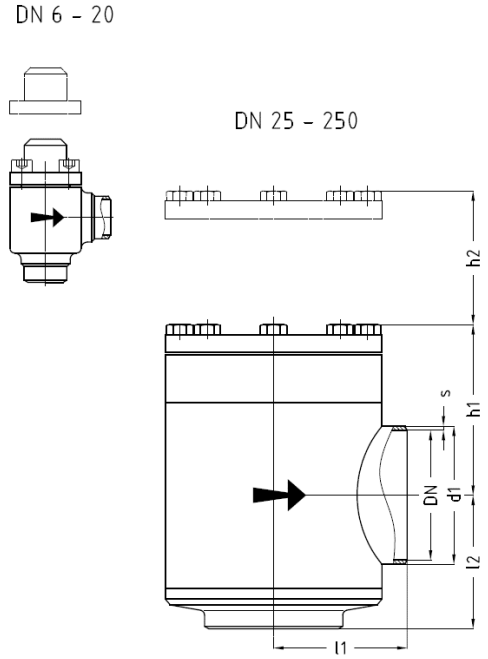

Pressure / temperature operating limits:
PS: Max. permissible operating pressure in bar
TS: Permissible operating temperature in °C associated with the permissible operating pressures (PS)
PN: Nominal pressure rating

DN / INCH	PN	-10	+50	+200	TS [°C]
DN 6...20 1/8"...3/4"	PN25	25	25	25	PS [bar]
	PN40	40	40	40	PS [bar]
	PN63	63	63	63	PS [bar]
DN 25...200 1"...8"	PN25	25	25	25	PS [bar]
	PN40	40	40	40	PS [bar]
	PN63	63	63	63	PS [bar]
DN 250 10"	PN25	25	25	25	PS [bar]
	PN40	40	40	40	PS [bar]

Nominal size:		Welding ends acc. to:									PN40/63, DN6-15:				
		ISO Series 1			ISO Series 2		ANSI Sched 40		ANSI Sched 80		Dimensions l1 to h2 same as for DN20				
DN	INCH	d1	s1)	s2)	d1	s	d1	s	d1	s	l1	l2	h1	h1*)	h2
6	1/8"	10.2	1.6	1.6			10.3	1.7	10.3	2.4	35	35	40		35
8	1/4"	13.5	1.8	1.8			13.7	2.2	13.7	3.0	35	35	40		35
10	3/8"	17.2	1.8	1.8	15.0	2.5	17.1	2.3	17.1	3.2	35	35	40		35

Latest revision: 05.02.2026. Subject to modifications.
The most recent version of this document is available on awpvalves.com/downloads/

Nominal size:		Welding ends acc. to:									PN40/63, DN6-15:				
15	1/2"	21.3	2.0	2.0	20.0	2.5	21.3	2.8	21.3	3.7	35	35	40		35
20	3/4"	26.9	2.3	2.6	25.0	2.5	26.7	2.9	26.7	3.9	41	41	50		45
25	1"	33.7	2.6	2.6	32.0	3.0	33.4	3.4	33.4	4.5	60	60	66		70
32	1 1/4"	42.4	2.6	2.9	38.0	3.0	42.2	3.6	42.2	4.8	60	60	66		70
40	1 1/2"	48.3	2.6	2.9	45.0	3.0	48.3	3.7	48.3	5.1	70	70	77		90
50	2"	60.3	2.9	2.9	57.0	3.2	60.3	3.9			70	70	77		90
65	2 1/2"	76.1	2.9	3.2	76.1	3.6	73.0	5.2			85	85	89		110
80	3"	88.9	3.2	3.6	88.9	4.0	88.9	5.5			100	100	129		155
100	4"	114.3	3.6	4.0	108.0	4.0	114.3	6.0			120	120	137		170
125	5"	139.7	4.0	4.5	133.0	4.0	141.3	6.6			135	135	175	180	250
150	6"	168.3	4.5	5.6	159.0	4.5	168.3	7.1			150	150	192		280
200	8"	219.1	6.3	7.1			219.1	8.2			195	195	256		380
250	10"	273.0	7.1				273.0	9.3			236	236	278		420

Table 4: Dimensions

1) PN25 / PN40 2) PN63 *) only for DN125 PN63, h2 = dismantling dimension

8 RV D FL HT

D: Straight-way, **FL:** flanged ends, **HT:**Temperature up to +200°C
RV steel check valve - with damping for natural gases and liquids (e.g. NH3, CO2) and non-corrosive media according to EN 378-1
Optional: LKL - linear ball bearing from DN 40-200

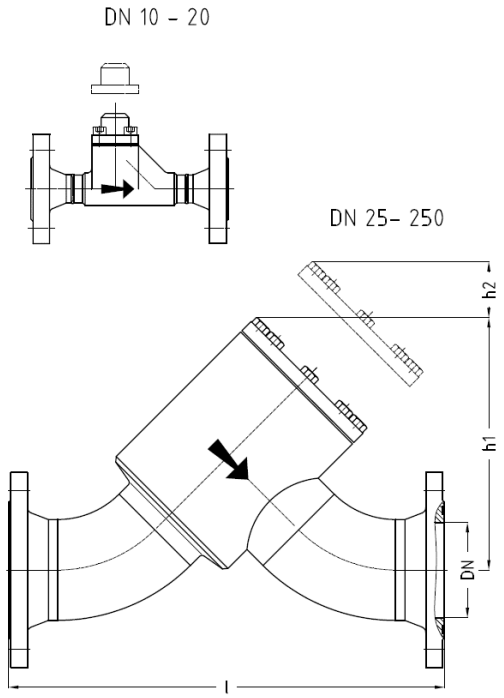

Pressure / temperature operating limits:
PS: Max. permissible operating pressure in bar
TS: Permissible operating temperature in °C associated with the permissible operating pressures (PS)
PN: Nominal pressure rating

DN / INCH	PN	-10	+50	+200	TS [°C]
DN 10...20 3/8"...3/4"	PN25	25	25	25	PS [bar]
	PN40	40	40	40	PS [bar]
	PN63	63	63	63	PS [bar]
DN 25...200 1"...8"	PN25	25	25	25	PS [bar]
	PN40	40	40	40	PS [bar]
	PN63	63	63	63	PS [bar]
DN 250 10"	PN25	25	25	25	PS [bar]
	PN40	40	40	40	PS [bar]

Nominal size:		Flanged ends acc. to:					PN40/PN63, DN10-15:		
		AWP DN10-20 PN25 DN25-80 PN40	PN25 DIN 2634 EN1092-1	PN40 DIN 2635 EN1092-1	PN63 DIN 2636 EN1092-1	ANSI 300 RF	Dimensions h1 to h2 same as for DN20		
DN	INCH	l	l	l	l	l / l1)	h1	h1*)	h2
10	3/8"	149	156	182	202		70		35

Nominal size:		Flanged ends acc. to:					PN40/PN63, DN10-15:		
15	1/2″	149	162	188	202	192/218	70		35
20	3/4″	175	192	192	208	228	73		45
25	1″	230	222	222	258	266	127		50
32	1 1/4″	244	240	240	276	286	130		50
40	1 1/2″	235	248	248	282	295	142		65
50	2″	270	280	280	308	324	147		65
65	2 1/2″	365	362	362	394	410	191		75
80	3″	413	422	422	450	464	245		115
100	4″		518	518	544	560	286		125
125	5″		599	599	639	660	351	354	180
150	6″		689	689	729	736	394		210
200	8″		870	886	930	934	522		265
250	10″		1053	1087		1113	620		300

Table 5: Dimensions

l[1)] PN40/PN63 *) only for DN125 PN63, h2 = dismantling dimension, DIN/EN flange facings with DIN 2512 groove as standard

9 RV D FL NIRO HT

D: Straight-way, **FL:** flanged ends, **HT:**Temperature up to +200°C
RV stainless steel check valve - with damping for natural gases and liquids (e.g. NH3, CO2) and non-corrosive media according to EN 378-1
Optional: LKL - linear ball bearing from DN 40-200

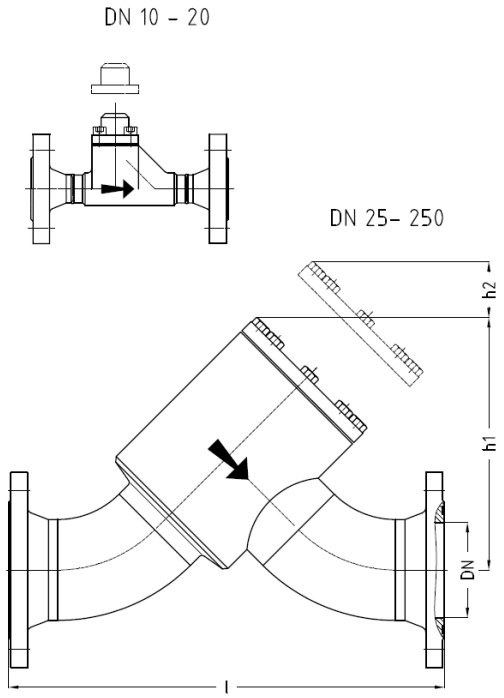

Pressure / temperature operating limits:
PS: Max. permissible operating pressure in bar
TS: Permissible operating temperature in °C associated with the permissible operating pressures (PS)
PN: Nominal pressure rating

DN / INCH	PN	-10	+50	+200	TS [°C]
DN 10...20 3/8”...3/4”	PN25	25	25	25	PS [bar]
	PN40	40	40	40	PS [bar]
	PN63	63	63	63	PS [bar]
DN 25...200 1”...8”	PN25	25	25	25	PS [bar]
	PN40	40	40	40	PS [bar]
	PN63	63	63	63	PS [bar]
DN 250 10”	PN25	25	25	25	PS [bar]
	PN40	40	40	40	PS [bar]

Nominal size:		Flanged ends acc. to:							
		AWP DN10-20 PN25 DN25-80 PN40	PN25 DIN 2634 EN1092-1	PN40 DIN 2635 EN1092-1	PN63 DIN 2636 EN1092-1	ANSI 300 RF			
DN	INCH	l	l	l	l	l	h1	h1*)	h2
10	3/8”	175	182	182	202		73		45
15	1/2”	175	188	188	202	218	73		45

Nominal size:		Flanged ends acc. to:							
20	3/4″	175	192	192	208	228	73		45
25	1″	230	222	222	258	266	127		50
32	1 1/4″	244	240	240	276	286	130		50
40	1 1/2″	235	248	248	282	295	142		65
50	2″	270	280	280	308	324	147		65
65	2 1/2″	365	362	362	394	410	191		75
80	3″	413	422	422	450	464	245		115
100	4″		518	518	544	560	286		125
125	5″		599	599	639	660	351	354	180
150	6″		689	689	729	736	394		210
200	8″		870	886	930	934	522		265
250	10″		1053	1087		1113	620		300

Table 6: Dimensions

*) only for DN125 PN63, h2 = dismantling dimension, DIN/EN flange facings with DIN 2512 groove as standard

10 RV E FL HT

I: Angle, **FL:** Flanged ends, **HT:** Temperature up to +200°C
RV steel check valve - with damping for natural gases and liquids (e.g. NH3, CO2) and non-corrosive media according to EN 378-1
Optional: LKL - linear ball bearing from DN 40-200

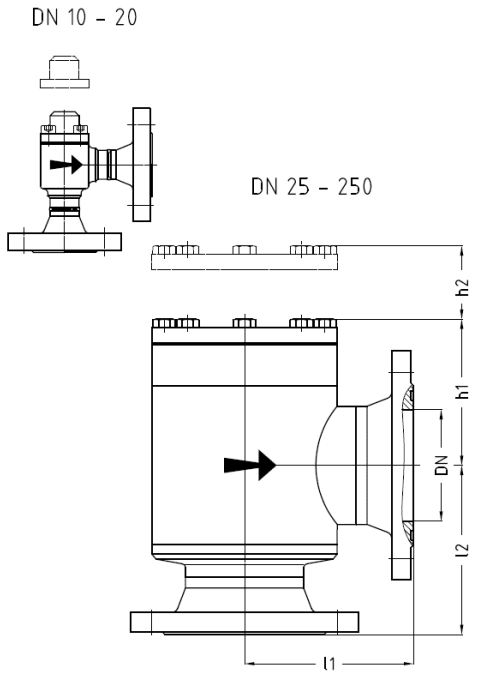

Pressure / temperature operating limits:
PS: Max. permissible operating pressure in bar
TS: Permissible operating temperature in °C associated with the permissible operating pressures (PS)
PN: Nominal pressure rating

DN / INCH	PN	-10	+50	+200	TS [°C]
DN 10...20 3/8"...3/4"	PN25	25	25	25	PS [bar]
	PN40	40	40	40	PS [bar]
	PN63	63	63	63	PS [bar]
DN 25...200 1"...8"	PN25	25	25	25	PS [bar]
	PN40	40	40	40	PS [bar]
	PN63	63	63	63	PS [bar]
DN 250 10"	PN25	25	25	25	PS [bar]
	PN40	40	40	40	PS [bar]

Nominal size		Flange connection acc. to:										PN40/PN63, DN6-15:		
		AWP DN10-20 PN25 DN25-80 PN40		PN25 DIN 2634 EN1092-1		PN40 DIN 2635 EN1092-1		PN63 DIN 2536 EN1092-1		ANSI 300 RF		Dimensions h1 to h2 same as for DN20		
DN	INCH	l1	l2	l1	l1	l1	l2	l1	l2	l1/ l11)	l2/ l21)	h1	h1*)	h2
10	3/8"	67.5	67.5	71	71	77	77	87	87			40		35

Nominal size		Flange connection acc. to:										PN40/PN63, DN6-15:		
15	1/2"	67.5	67.5	74	74	80	80	87	87	89/95	89/95	40		35
20	3/4"	73.5	73.5	82	82	82	82	90	90	100	100	50		45
25	1"	105	105	101	119	119	101	119	119	123	123	66		70
32	1 1/4"	105	105	103	121	121	103	121	121	126	126	66		70
40	1 1/2"	110	110	116	133	133	116	133	133	139	139	77		90
50	2"	114	114	119	133	133	119	133	133	141	141	77		90
65	2 1/2"	140	140	138	154	154	138	154	154	162	162	89		110
80	3"	155	155	159	173	173	159	173	173	180	180	129		155
100	4"			186	199	199	186	199	199	207	207	137		170
125	5"			204	224	224	204	224	224	235	235	175	180	250
150	6"			226	246	246	226	246	246	250	250	192		280
200	8"			276	276	284	284	306	306	307	307	256		380
250	10"			325	325	342	342			354	354	278		420

Table 7: Dimensions

l1[1)] , l2[1)] PN40/PN63 *) only for DN125 PN63, h2 = dismantling dimension DIN/EN flange facings with DIN 2512 groove as standard

11 RV E FL NIRO HT

I: Angle, **FL:** Flanged ends, **HT:** Temperature up to +200°C
RV stainless steel check valve - with damping for natural gases and liquids (e.g. NH3, CO2) and non-corrosive media according to EN 378-1
Optional: LKL - linear ball bearing from DN 40-200

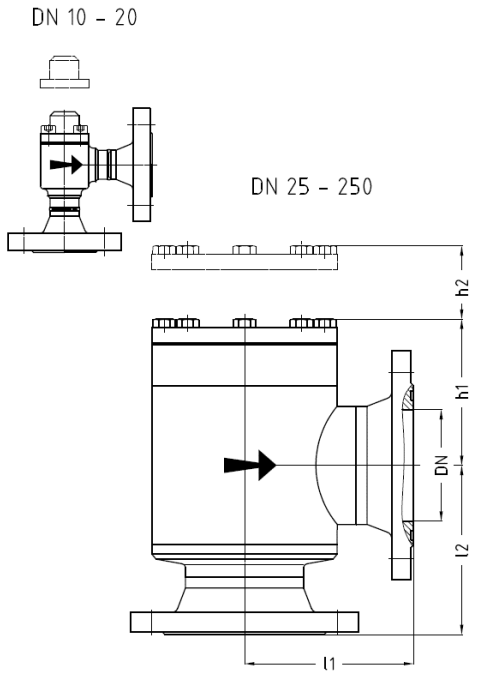

Pressure / temperature operating limits:
PS: Max. permissible operating pressure in bar
TS: Permissible operating temperature in °C associated with the permissible operating pressures (PS)
PN: Nominal pressure rating

DN / INCH	PN	-10	+50	+200	TS [°C]
DN 10...20 3/8"...3/4"	PN25	25	25	25	PS [bar]
	PN40	40	40	40	PS [bar]
	PN63	63	63	63	PS [bar]
DN 25...200 1"...8"	PN25	25	25	25	PS [bar]
	PN40	40	40	40	PS [bar]
	PN63	63	63	63	PS [bar]
DN 250 10"	PN25	25	25	25	PS [bar]
	PN40	40	40	40	PS [bar]

Nominal size		Flange connection acc. to:												
		AWP DN10-20 PN25 DN25-80 PN40		PN25 DIN 2634 EN1092-1		PN40 DIN 2635 EN1092-1		PN63 DIN 2536 EN1092-1		ANSI 300 RF				
DN	INCH	l1	l2	l1	l1	l1	l2	l1	l2	l1	l2	h1	h1*)	h2
10	3/8"	73.5	73.5	77	77	77	77	87	87			50		45
15	1/2"	73.5	73.5	80	80	80	80	87	87	95	95	50		45
20	3/4"	73.5	73.5	82	82	82	82	90	90	100	100	50		45

Nominal size		Flange connection acc. to:												
25	1“	105	105	101	119	119	101	119	119	123	123	66		70
32	1 1/4“	105	105	103	121	121	103	121	121	126	126	66		70
40	1 1/2“	110	110	116	133	133	116	133	133	139	139	77		90
50	2“	114	114	119	133	133	119	133	133	141	141	77		90
65	2 1/2“	140	140	138	154	154	138	154	154	162	162	89		110
80	3“	155	155	159	173	173	159	173	173	180	180	129		155
100	4“			186	199	199	186	199	199	207	207	137		170
125	5“			204	224	224	204	224	224	235	235	175	180	250
150	6“			226	246	246	226	246	246	250	250	192		280
200	8“			276	276	284	284	306	306	307	307	256		380
250	10“			325	325	342	342			354	354	278		420

Table 8: Dimensions

*) only for DN125 PN63, h2 = dismantling dimension, DIN/EN flange facings with DIN 2512 groove as standard

12 RV D LE HT

D: Straight-way, **LE:** Soldering ends, **HT:** Temperature up to +200°C
RV steel check valve - with damping for natural gases and liquids (e.g. NH3, CO2) and non-corrosive media according to EN 378-1
Optional: LKL - linear ball bearing from DN 40-200

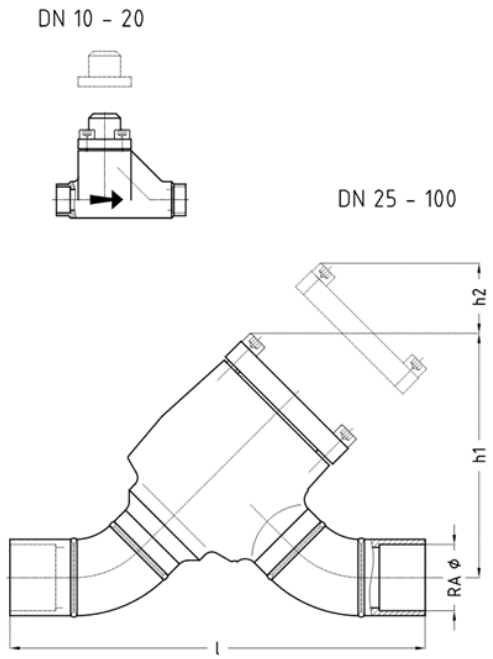

Pressure / temperature operating limits:
PS: Max. permissible operating pressure in bar
TS: Permissible operating temperature in °C associated with the permissible operating pressures (PS)
PN: Nominal pressure rating

DN	PN	-10	+50	+200	TS [°C]
DN 10...20	PN25	25	25	25	PS [bar]
	PN40	40	40	40	PS [bar]
	PN63	63	63	63	PS [bar]
DN 25...100	PN25	25	25	25	PS [bar]
	PN40	40	40	40	PS [bar]
	PN63	63	63	63	PS [bar]

Nominal size:	Soldering ends acc. to:	PN63, DN10-15:		
		Dimensions l to h2 same as for DN20		
DN	RAØ	l	h1	h2
10	12	84	70	35
15	15	84	70	35
15	18	84	70	35
20	22	110	73	45
25	28	212	188	50
32	35	236	191	50
40	42	238	208	65

Nominal size:	Soldering ends acc. to:	PN63, DN10-15:		
50	54	284	214	65
65	64	366	248	75
65	76	366	248	75
80	89	406	326	115
100	108	518	188	125

Table 9: Dimensions

h2 = dismantling dimension

13 RV D LE NIRO HT

D: Straight-way, **LE:** Soldering ends, **HT:** Temperature up to +200°C
RV stainless steel check valve - with damping for natural gases and liquids (e.g. NH3, CO2) and non-corrosive media according to EN 378-1
Optional: LKL - linear ball bearing from DN 40-200

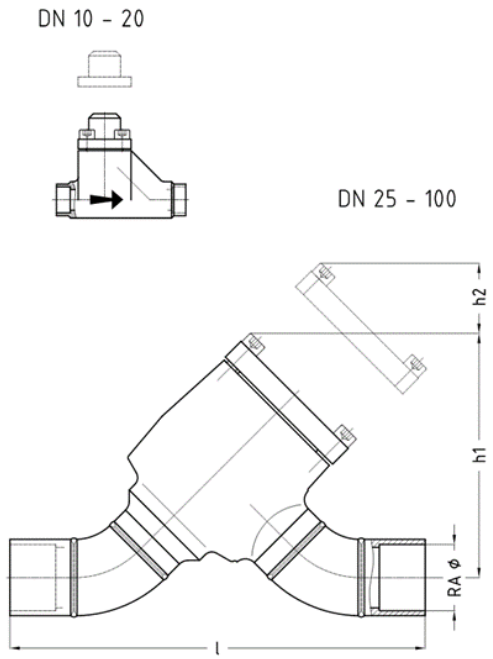

Pressure / temperature operating limits:
PS: Max. permissible operating pressure in bar
TS: Permissible operating temperature in °C associated with the permissible operating pressures (PS)
PN: Nominal pressure rating

DN	PN	-10	+50	+200	TS [°C]
DN 10...20	PN25	25	25	25	PS [bar]
	PN40	40	40	40	PS [bar]
	PN63	63	63	63	PS [bar]
DN 25...100	PN25	25	25	25	PS [bar]
	PN40	40	40	40	PS [bar]
	PN63	63	63	63	PS [bar]

Nominal size:	Soldering ends acc. to:	PN63, DN10-15:		
		Dimensions l to h2 same as for DN20		
DN	RAØ	l	h1	h2
10	12	84	70	35
15	15	84	70	35
15	18	84	70	35
20	22	110	73	45
25	28	212	188	50
32	35	236	191	50
40	42	238	208	65

Latest revision: 05.02.2026. Subject to modifications.
The most recent version of this document is available on awpvalves.com/downloads/

Nominal size:	Soldering ends acc. to:	PN63, DN10-15:		
50	54	284	214	65
65	64	366	248	75
65	76	366	248	75
80	89	406	326	115
100	108	518	188	125

Table 10: Dimensions

h2 = dismantling dimension

14 RV E LE HT

E: Angle, **LE:** Soldering ends, **HT:** Temperature up to +200°C
RV steel check valve - with damping for natural gases and liquids (e.g. NH3, CO2) and non-corrosive media according to EN 378-1
Optional: LKL - linear ball bearing from DN 40-200

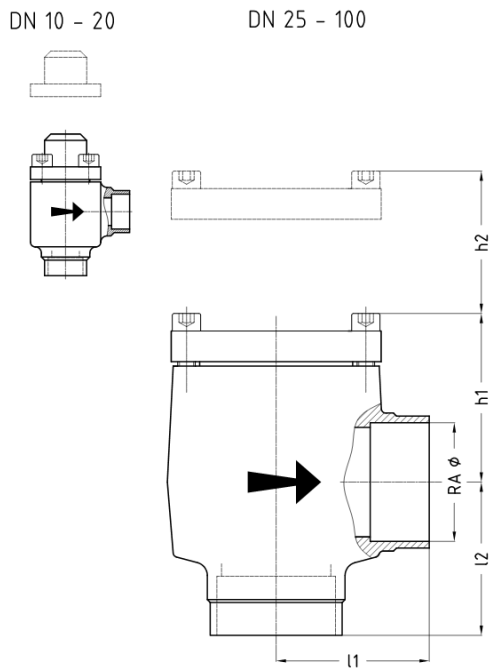

Pressure / temperature operating limits:
PS: Max. permissible operating pressure in bar
TS: Permissible operating temperature in °C associated with the permissible operating pressures (PS)
PN: Nominal pressure rating

DN	PN	-10	+50	+200	TS [°C]
DN 10...20	PN25	25	25	25	PS [bar]
	PN40	40	40	40	PS [bar]
	PN63	63	63	63	PS [bar]
DN 25...100	PN25	25	25	25	PS [bar]
	PN40	40	40	40	PS [bar]
	PN63	63	63	63	PS [bar]

Nominal size:	Soldering ends acc. to:	PN63, DN10-15:			
		Dimensions l1 to h2 same as for DN20			
DN	RAØ	l1	l2	h1	h2
10	12	35	35	40	35
15	15	35	35	40	35
15	18	35	35	40	35
20	22	41	41	50	45
25	28	60	60	66	70
32	35	60	60	66	70
40	42	70	70	77	90

Nominal size:	Soldering ends acc. to:	PN63, DN10-15:			
50	54	70	70	77	90
65	64	140	140	89	110
65	76	140	140	89	110
80	89	151	151	129	155
100	108	186	186	137	170

Table 11: Dimensions

h2 = dismantling dimension

15 RV E LE NIRO HT

E: Angle, **LE:** Soldering ends, **HT:** Temperature up to +200°C
RV stainless steel check valve - with damping for natural gases and liquids (e.g. NH3, CO2) and non-corrosive media according to EN 378-1
Optional: LKL - linear ball bearing from DN 40-200

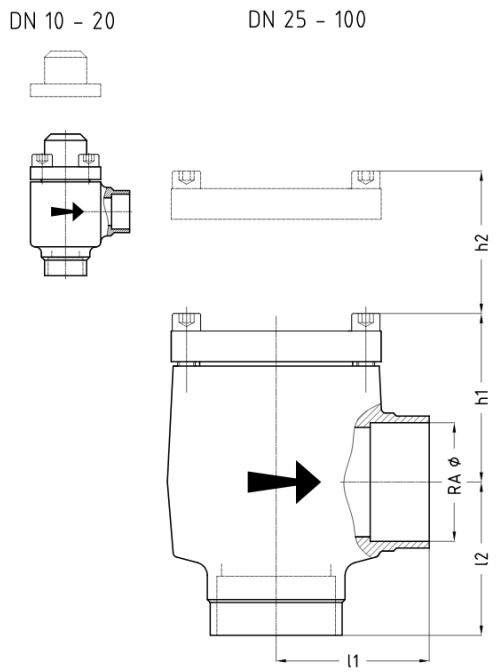

Pressure / temperature operating limits:
PS: Max. permissible operating pressure in bar
TS: Permissible operating temperature in °C associated with the permissible operating pressures (PS)
PN: Nominal pressure rating

DN	PN	-10	+50	+200	TS [°C]
DN 10...20	PN25	25	25	25	PS [bar]
	PN40	40	40	40	PS [bar]
	PN63	63	63	63	PS [bar]
DN 25...100	PN25	25	25	25	PS [bar]
	PN40	40	40	40	PS [bar]
	PN63	63	63	63	PS [bar]

Nominal size:	Soldering ends acc. to:	PN40/63, DN10-15:			
		Dimensions l1 to h2 same as for DN20			
DN	RAØ	l1	l2	h1	h2
10	12	35	35	40	35
15	15	35	35	40	35
15	18	35	35	40	35
20	22	41	41	50	45
25	28	60	60	66	70
32	35	60	60	66	70
40	42	70	70	77	90

Latest revision: 05.02.2026. Subject to modifications.
The most recent version of this document is available on awpvalves.com/downloads/

Nominal size:	Soldering ends acc. to:	PN40/63, DN10-15:			
50	54	70	70	77	90
65	64	140	140	89	110
65	76	140	140	89	110
80	89	151	151	129	155
100	108	186	186	137	170

Table 12: Dimensions

h2 = dismantling dimension

16 RV D SE HT

D: Straight-way, **SE:** Screwed ends,**HT:** Temperature up to +200°C
RV steel check valve - with damping for natural gases and liquids (e.g. NH3, CO2) and non-corrosive media according to EN 378-1
Optional: LKL - linear ball bearing from DN 40-200

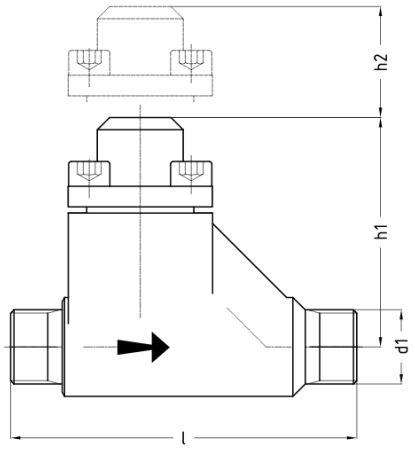

NOTICE! Installation lengths (l) may vary due to the different threads.
Pressure / temperature operating limits:
PS: Max. permissible operating pressure in bar
TS: Permissible operating temperature in °C associated with the permissible operating pressures (PS)
PN: Nominal pressure rating

DN	PN	-10	+50	+200	TS [°C]
DN 8...20	PN25	25	25	25	PS [bar]
	PN40	40	40	40	PS [bar]
	PN63	63	63	63	PS [bar]

Nominal size:	Screwed ends acc. to:	PN63, DN8:		
		Dimensions l to h2 same as for DN20		
DN	d1	l	h1	h2
8	For coding, connections, see **Coding of connections for small and service valves [▶ 115]**	84	58	35
20		110	73	45

Table 13: Dimensions
h2 = dismantling dimension

17 RV D SE NIRO HT

D: Straight-way, **SE:** Screwed ends,**HT:** Temperature up to +200°C
RV stainless steel check valve - with damping for natural gases and liquids (e.g. NH3, CO2) and non-corrosive media according to EN 378-1
Optional: LKL - linear ball bearing from DN 40-200

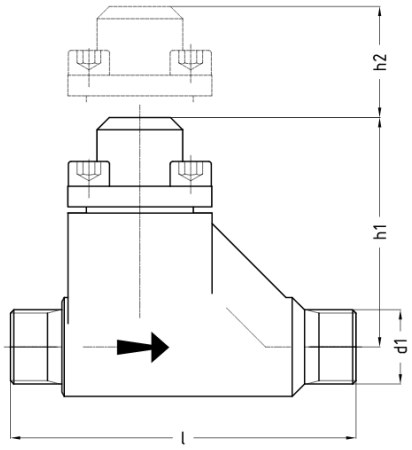

NOTICE! Installation lengths (l) may vary due to the different threads.
Pressure / temperature operating limits:
PS: Max. permissible operating pressure in bar
TS: Permissible operating temperature in °C associated with the permissible operating pressures (PS)
PN: Nominal pressure rating

DN	PN	-10	+50	+200	TS [°C]
DN 8...20	PN25	25	25	25	PS [bar]
	PN40	40	40	40	PS [bar]
	PN63	63	63	63	PS [bar]

Nominal size:	Screwed ends acc. to:	PN40/63, DN8:		
		Dimensions l to h2 same as for DN20		
DN	d1	l	h1	h2
8	For coding, connections, see **Coding of connections for small and service valves [▶ 115]**	84	58	35
20		110	73	45

Table 14: Dimensions
h2 = dismantling dimension

18 RV E SE HT

I: Angle, **SE:** Screwed ends, **HT:** Temperature up to +200°C
RV steel check valve - with damping for natural gases and liquids (e.g. NH3, CO2) and non-corrosive media according to EN 378-1
Optional: LKL - linear ball bearing from DN 40-200

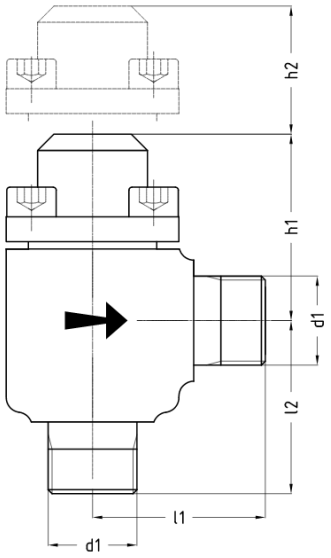

NOTICE! Installation lengths (l) may vary due to the different threads.
Pressure / temperature operating limits:
PS: Max. permissible operating pressure in bar
TS: Permissible operating temperature in °C associated with the permissible operating pressures (PS)
PN: Nominal pressure rating

DN	PN	-10	+50	+200	TS [°C]
DN 8...20	PN25	25	25	25	PS [bar]
	PN40	40	40	40	PS [bar]
	PN63	63	63	63	PS [bar]

Nominal size:	Screwed ends acc. to:	PN63, DN8:			
		Dimensions l1 to h2 same as for DN20			
DN	d1	l1	l2	h1	h2
8	For coding, connections, see **Coding of connections for small and service valves [▶ 115]**	35	35	40	35
20		41	41	50	45

Table 15: Dimensions
h2 = dismantling dimension

19 RV E SE NIRO HT

I: Angle, **SE:** Screwed ends, **HT:** Temperature up to +200°C
RV stainless steel check valve - with damping for natural gases and liquids (e.g. NH3, CO2) and non-corrosive media according to EN 378-1
Optional: LKL - linear ball bearing from DN 40-200

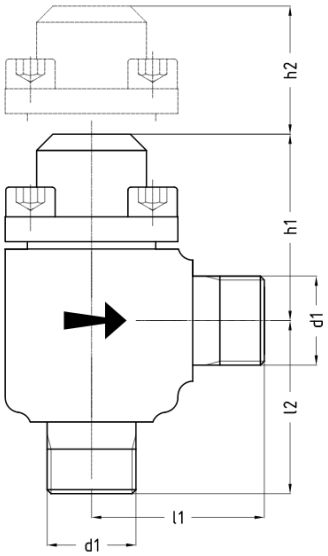

NOTICE! Installation lengths (l) may vary due to the different threads.
Pressure / temperature operating limits:
PS: Max. permissible operating pressure in bar
TS: Permissible operating temperature in °C associated with the permissible operating pressures (PS)
PN: Nominal pressure rating

DN	PN	-10	+50	+200	TS [°C]
DN 8...20	PN25	25	25	25	PS [bar]
	PN40	40	40	40	PS [bar]
	PN63	63	63	63	PS [bar]

Nominal size:	Screwed ends acc. to:	PN40/63, DN8:			
		Dimensions l1 to h2 same as for DN20			
DN	d1	l1	l2	h1	h2
8	For coding, connections, see **Coding of connections for small and service valves [▶ 115]**	35	35	40	35
20		41	41	50	45

Table 16: Dimensions
h2 = dismantling dimension

20 RVA materials

Designation and materials
RVA HT - shut-off check valve

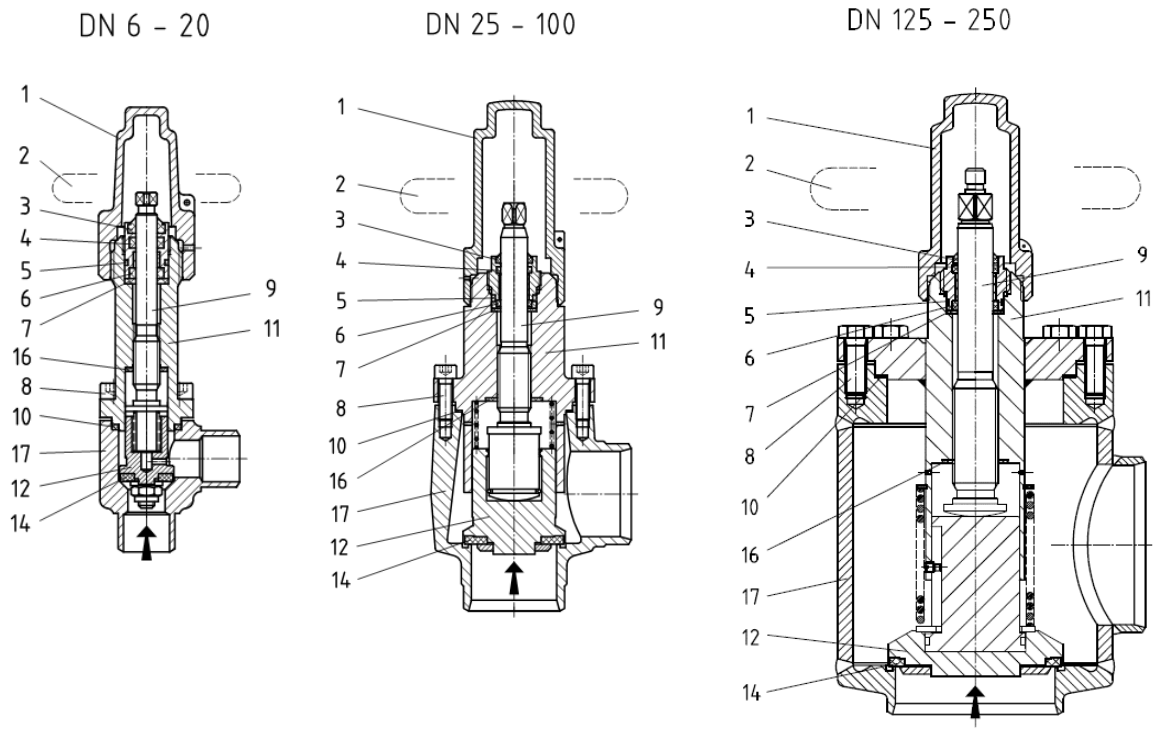

	Part	Material for steel valves	Material for stainless steel valves
1	Cap	Aluminium AlSi10Mg	Aluminium AlSi10Mg
2	Handwheel	Steel	Steel
3	Wiper ring	NBR	NBR
4	O-ring A	CR, NBR, HNBR, EPDM, FPM*	CR, NBR, HNBR, EPDM, FPM*
5	O-ring B	CR, NBR, HNBR, EPDM, FPM*	CR, NBR, HNBR, EPDM, FPM*
6	Spring-loaded U-ring	PTFE	PTFE
7	Flat sealing ring for threaded bush	AFM30	AFM30
8	Bonnet screw	8.8	A2-70
9	Stem	X8CrNiS18-9 1.4305	X8CrNiS18-9 1.4305
10	Flat sealing ring for bonnet	AFM30	AFM30
11	Bonnet	S355J2 1.0577	X8CrNiS18-9 1.4305 X5CrNi18-10 1.4301 X2CrNi19-11 1.4306
12	Valve disc	S355J2 1.0577	X8CrNiS18-9 1.4305 X5CrNi18-10 1.4301
14	Flat sealing ring for valve disc	PTFE	PTFE
16	Back seal	AFM30	AFM30

Latest revision: 05.02.2026. Subject to modifications.
The most recent version of this document is available on awpvalves.com/downloads/

	Part	Material for steel valves	Material for stainless steel valves
17	Body	P235GH 1.0345 S355J2 1.0577 P355N 1.0562	X5CrNi18-10 1.4301

* depending on the refrigerant used

21 RVA D AE HT / RVA D AE DV HT

D: Straight-way, **AE:** Welding ends, **DV:** Bonnet extension, **HT:** Temperature up to +200°C
RVA steel shut-off check valve - with damping, stem seal spring-energised PTFE ring for natural gases and liquids (e.g. NH3, CO2) and non-corrosive media according to EN 378-1
Optional: LKL - linear ball bearing from DN 40-200

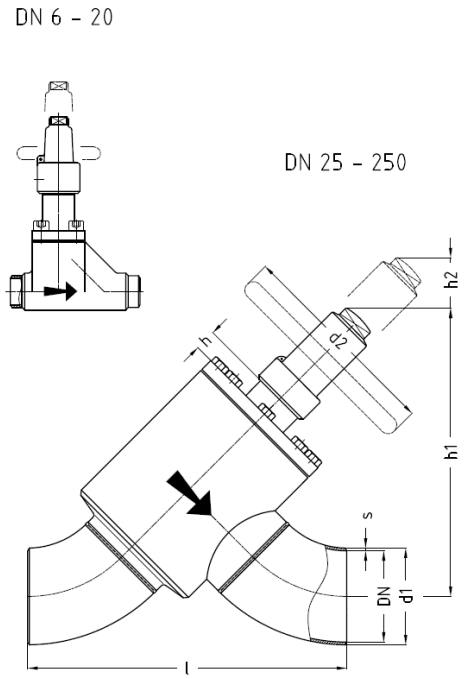

Pressure / temperature operating limits:
PS: Max. permissible operating pressure in bar
TS: Permissible operating temperature in °C associated with the permissible operating pressures (PS)
PN: Nominal pressure rating

DN / INCH	PN	-10	+50	+200	TS [°C]
DN 6...20 1/8"...3/4"	PN25	25	25	25	PS [bar]
	PN40	40	40	40	PS [bar]
	PN63	63	63	63	PS [bar]
DN 25...200 1"...8"	PN25	25	25	25	PS [bar]
	PN40	40	40	40	PS [bar]
	PN63	63	63	63	PS [bar]
DN 250 10"	PN25	25	25	25	PS [bar]
	PN40	40	40	40	PS [bar]

Nominal size:		Welding ends acc. to:									PN63, DN10-15:						
		ISO Series 1			ISO Series 2		ANSI Sched 40		ANSI Sched 80		Dimensions l to d2 same as for DN20						
DN	INCH	d1	s1)	s2)	d1	s	d1	s	d1	s	l	h	h*)	h1	h1*)	h2	d2
6	1/8"	10.2	1.6	1.6			10.3	1.7	10.3	2.4	84	45		150		35	60
8	1/4"	13.5	1.8	1.8			13.7	2.2	13.7	3.0	84	45		150		35	60
10	3/8"	17.2	1.8	1.8	15.0	2.5	17.1	2.3	17.1	3.2	84	45		150		35	60

Nominal size:		Welding ends acc. to:									PN63, DN10-15:						
15	1/2"	21.3	2.0	2.0	20.0	2.5	21.3	2.8	21.3	3.7	84	45		150		35	60
20	3/4"	26.9	2.3	2.6	25.0	2.5	26.7	2.9	26.7	3.9	110	62		179		45	60
25	1"	33.7	2.6	2.6	32.0	3.0	33.4	3.4	33.4	4.5	140	39	78	202	231	70	120
32	1 1/4"	42.4	2.6	2.9	38.0	3.0	42.2	3.6	42.2	4.8	154	39	78	206	233	70	120
40	1 1/2"	48.3	2.6	2.9	45.0	3.0	48.3	3.7	48.3	5.1	156	43	73	230	251	80	140
50	2"	60.3	2.9	2.9	57.0	3.2	60.3	3.9			182	43	73	236	259	80	140
65	2 1/2"	76.1	2.9	3.2	76.1	3.6	73.0	5.2			256	30	78	264	298	100	140
80	3"	88.9	3.2	3.6	88.9	4.0	88.9	5.5			304	21	77	327	367	110	180
100	4"	114.3	3.6	4.0	108.0	4.0	114.3	6.0			386	1	88	344	405	110	180
125	5"	139.7	4.0	4.5	133.0	4.0	141.3	6.6			461	29	129	420	491	140	300
150	6"	168.3	4.5	5.6	159.0	4.5	168.3	7.1			537	6	107	438	508	150	400
200	8"	219.1	6.3	7.1			219.1	8.2			708	1	102	608	675	170	630
250	10"	273.0	7.1				273.0	9.3			775	xx		xx		220	630

Table 17: Dimensions

1) PN25 / PN40 2) PN63 *) for valves with bonnet extension, h2 = dismantling dimension

22 RVA D AE NIRO HT / RVA D AE DV NIRO HT

D: Straight-way, **AE:** Welding ends, **DV:** Bonnet extension, **HT:** Temperature up to +200°C
RVA stainless steel shut-off check valve - with damping, stem seal spring-energised PTFE ring for natural gases and liquids (e.g. NH3, CO2) and non-corrosive media according to EN 378-1
Optional: LKL - linear ball bearing from DN 40-200

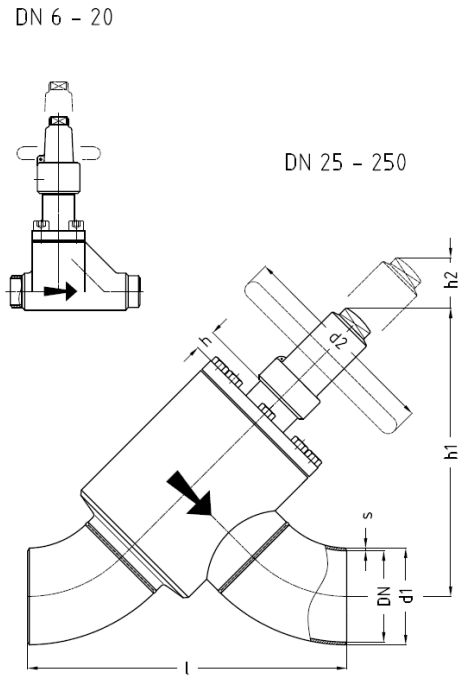

Pressure / temperature operating limits:
PS: Max. permissible operating pressure in bar
TS: Permissible operating temperature in °C associated with the permissible operating pressures (PS)
PN: Nominal pressure rating

DN / INCH	PN	-10	+50	+200	TS [°C]
DN 6...20 1/8"...3/4"	PN25	25	25	25	PS [bar]
	PN40	40	40	40	PS [bar]
	PN63	63	63	63	PS [bar]
DN 25...200 1"...8"	PN25	25	25	25	PS [bar]
	PN40	40	40	40	PS [bar]
	PN63	63	63	63	PS [bar]
DN 250 10"	PN25	25	25	25	PS [bar]
	PN40	40	40	40	PS [bar]

Nominal size:		Welding ends acc. to:									PN63, DN10-15:						
		ISO Series 1			ISO Series 2		ANSI Sched 40		ANSI Sched 80		Dimensions l to d2 same as for DN20						
DN	INCH	d1	s1)	s2)	d1	s	d1	s	d1	s	l	h	h*)	h1	h1*)	h2	d2
6	1/8"	10.2	1.6	1.6			10.3	1.7	10.3	2.4	84	45		150		35	60
8	1/4"	13.5	1.8	1.8			13.7	2.2	13.7	3.0	84	45		150		35	60
10	3/8"	17.2	1.8	1.8	15.0	2.5	17.1	2.3	17.1	3.2	84	45		150		35	60

Nominal size:		Welding ends acc. to:									PN63, DN10-15:						
15	1/2"	21.3	2.0	2.0	20.0	2.5	21.3	2.8	21.3	3.7	84	45		150		35	60
20	3/4"	26.9	2.3	2.6	25.0	2.5	26.7	2.9	26.7	3.9	110	62		179		45	60
25	1"	33.7	2.6	2.6	32.0	3.0	33.4	3.4	33.4	4.5	140	39	78	202	231	70	120
32	1 1/4"	42.4	2.6	2.9	38.0	3.0	42.2	3.6	42.2	4.8	154	39	78	206	233	70	120
40	1 1/2"	48.3	2.6	2.9	45.0	3.0	48.3	3.7	48.3	5.1	156	43	73	230	251	80	140
50	2"	60.3	2.9	2.9	57.0	3.2	60.3	3.9			182	43	73	236	259	80	140
65	2 1/2"	76.1	2.9	3.2	76.1	3.6	73.0	5.2			256	30	78	264	298	100	140
80	3"	88.9	3.2	3.6	88.9	4.0	88.9	5.5			304	21	77	327	367	110	180
100	4"	114.3	3.6	4.0	108.0	4.0	114.3	6.0			386	1	88	344	405	110	180
125	5"	139.7	4.0	4.5	133.0	4.0	141.3	6.6			461	29	129	420	491	140	300
150	6"	168.3	4.5	5.6	159.0	4.5	168.3	7.1			537	6	107	438	508	150	400
200	8"	219.1	6.3	7.1			219.1	8.2			708	1	102	608	675	170	630
250	10"	273.0	7.1				273.0	9.3			775	xx		xx		220	630

Table 18: Dimensions

1) PN25 / PN40 2) PN63 *) for valves with bonnet extension, h2 = dismantling dimension

23 RVA E AE HT / RVA E AE DV HT

E: Angle, **AE:** Welding ends, **DV:** Bonnet extension, **HT:** Temperature up to +200°C
RVA steel shut-off check valve - with damping, stem seal spring-energised PTFE ring for natural gases and liquids (e.g. NH3, CO2) and non-corrosive media according to EN 378-1
Optional: LKL - linear ball bearing from DN 40-200

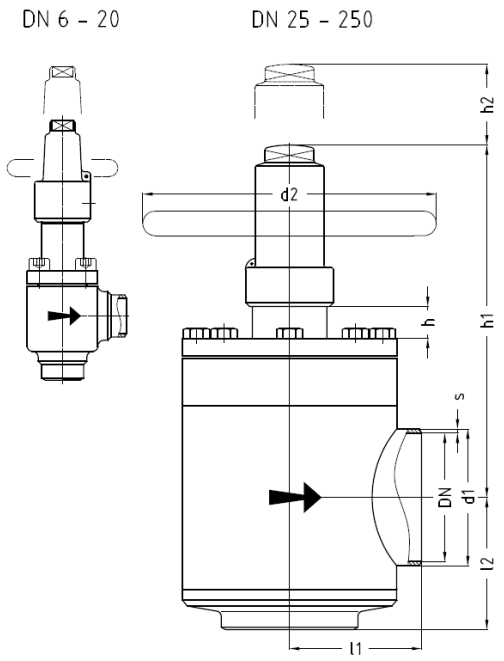

Pressure / temperature operating limits:
PS: Max. permissible operating pressure in bar
TS: Permissible operating temperature in °C associated with the permissible operating pressures (PS)
PN: Nominal pressure rating

DN / INCH	PN	-10	+50	+200	TS [°C]
DN 6...20 1/8"...3/4"	PN25	25	25	25	PS [bar]
	PN40	40	40	40	PS [bar]
	PN63	63	63	63	PS [bar]
DN 25...200 1"...8"	PN25	25	25	25	PS [bar]
	PN40	40	40	40	PS [bar]
	PN63	63	63	63	PS [bar]
DN 250 10"	PN25	25	25	25	PS [bar]
	PN40	40	40	40	PS [bar]

Nominal size:		Welding ends acc. to:									PN63, DN10-15:							
		ISO Series 1			ISO Series 2		ANSI Sched 40		ANSI Sched 80		Dimensions l1 to d2 same as for DN20							
DN	INCH	d1	s1)	s2)	d1	s	d1	s	d1	s	l1	l2	h	h*)	h1	h1*)	h2	d2
6	1/8"	10.2	1.6	1.6			10.3	1.7	10.3	2.4	35	35	45		132		35	60
8	1/4"	13.5	1.8	1.8			13.7	2.2	13.7	3.0	35	35	45		132		35	60
10	3/8"	17.2	1.8	1.8	15.0	2.5	17.1	2.3	17.1	3.2	35	35	45		132		35	60

Latest revision: 05.02.2026. Subject to modifications.
The most recent version of this document is available on awpvalves.com/downloads/

Nominal size:		Welding ends acc. to:									PN63, DN10-15:							
15	1/2"	21.3	2.0	2.0	20.0	2.5	21.3	2.8	21.3	3.7	35	35	45		132		35	60
20	3/4"	26.9	2.3	2.6	25.0	2.5	26.7	2.9	26.7	3.9	41	41	62		156		45	60
25	1"	33.7	2.6	2.6	32.0	3.0	33.4	3.4	33.4	4.5	60	60	39	78	200	240	90	120
32	1 1/4"	42.4	2.6	2.9	38.0	3.0	42.2	3.6	42.2	4.8	60	60	39	78	200	240	90	120
40	1 1/2"	48.3	2.6	2.9	45.0	3.0	48.3	3.7	48.3	5.1	70	70	43	73	235	265	110	140
50	2"	60.3	2.9	2.9	57.0	3.2	60.3	3.9			70	70	43	73	235	265	110	140
65	2 1/2"	76.1	2.9	3.2	76.1	3.6	73.0	5.2			85	85	30	78	234	282	130	140
80	3"	88.9	3.2	3.6	88.9	4.0	88.9	5.5			100	100	21	77	293	350	150	180
100	4"	114.3	3.6	4.0	108.0	4.0	114.3	6.0			120	120	1	88	281	368	150	180
125	5"	139.7	4.0	4.5	133.0	4.0	141.3	6.6			135	135	29	129	359	456	190	300
150	6"	168.3	4.5	5.6	159.0	4.5	168.3	7.1			150	150	6	107	354	452	210	400
200	8"	219.1	6.3	7.1			219.1	8.2			195	195	1	102	508	608	240	630
250	10"	273.0	7.1				273.0	9.3			236	236	xx		xx		300	630

Table 19: Dimensions

1) PN25 / PN40 2) PN63 *) for valves with bonnet extension, h2 = dismantling dimension

24 RVA E AE NIRO HT / RVA E AE DV NIRO HT

E: Angle, **AE:** Welding ends, **DV:** Bonnet extension, **HT:** Temperature up to +200°C
RVA stainless steel shut-off check valve - with damping, stem seal spring-energised PTFE ring for natural gases and liquids (e.g. NH3, CO2) and non-corrosive media according to EN 378-1
Optional: LKL - linear ball bearing from DN 40-200

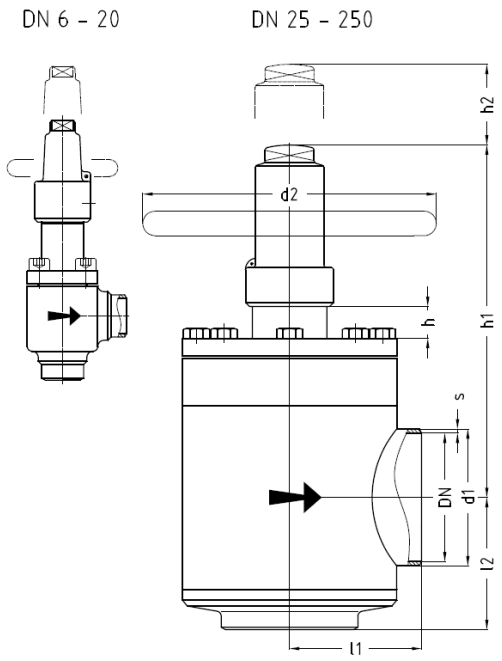

Pressure / temperature operating limits:
PS: Max. permissible operating pressure in bar
TS: Permissible operating temperature in °C associated with the permissible operating pressures (PS)
PN: Nominal pressure rating

DN / INCH	PN	-10	+50	+200	TS [°C]
DN 6...20 1/8"...3/4"	PN25	25	25	25	PS [bar]
	PN40	40	40	40	PS [bar]
	PN63	63	63	63	PS [bar]
DN 25...200 1"...8"	PN25	25	25	25	PS [bar]
	PN40	40	40	40	PS [bar]
	PN63	63	63	63	PS [bar]
DN 250 10"	PN25	25	25	25	PS [bar]
	PN40	40	40	40	PS [bar]

Nominal size:		Welding ends acc. to:									PN63, DN10-15:							
		ISO Series 1			ISO Series 2		ANSI Sched 40		ANSI Sched 80		Dimensions l1 to d2 same as for DN20							
DN	INCH	d1	s1)	s2)	d1	s	d1	s	d1	s	l1	l2	h	h*)	h1	h1*)	h2	d2
6	1/8"	10.2	1.6	1.6			10.3	1.7	10.3	2.4	35	35	45		132		35	60
8	1/4"	13.5	1.8	1.8			13.7	2.2	13.7	3.0	35	35	45		132		35	60
10	3/8"	17.2	1.8	1.8	15.0	2.5	17.1	2.3	17.1	3.2	35	35	45		132		35	60

Latest revision: 05.02.2026. Subject to modifications.
The most recent version of this document is available on awpvalves.com/downloads/

Nominal size:		Welding ends acc. to:									PN63, DN10-15:							
15	1/2"	21.3	2.0	2.0	20.0	2.5	21.3	2.8	21.3	3.7	35	35	45		132		35	60
20	3/4"	26.9	2.3	2.6	25.0	2.5	26.7	2.9	26.7	3.9	41	41	62		156		45	60
25	1"	33.7	2.6	2.6	32.0	3.0	33.4	3.4	33.4	4.5	60	60	39	78	200	240	90	120
32	1 1/4"	42.4	2.6	2.9	38.0	3.0	42.2	3.6	42.2	4.8	60	60	39	78	200	240	90	120
40	1 1/2"	48.3	2.6	2.9	45.0	3.0	48.3	3.7	48.3	5.1	70	70	43	73	235	265	110	140
50	2"	60.3	2.9	2.9	57.0	3.2	60.3	3.9			70	70	43	73	235	265	110	140
65	2 1/2"	76.1	2.9	3.2	76.1	3.6	73.0	5.2			85	85	30	78	234	282	130	140
80	3"	88.9	3.2	3.6	88.9	4.0	88.9	5.5			100	100	21	77	293	350	150	180
100	4"	114.3	3.6	4.0	108.0	4.0	114.3	6.0			120	120	1	88	281	368	150	180
125	5"	139.7	4.0	4.5	133.0	4.0	141.3	6.6			135	135	29	129	359	456	190	300
150	6"	168.3	4.5	5.6	159.0	4.5	168.3	7.1			150	150	6	107	354	452	210	400
200	8"	219.1	6.3	7.1			219.1	8.2			195	195	1	102	508	608	240	630
250	10"	273.0	7.1				273.0	9.3			236	236	xx		xx		300	630

Table 20: Dimensions

1) PN25 / PN40 2) PN63 *) for valves with bonnet extension, h2 = dismantling dimension

25 RVA D FL / RVA D FL DV

D: Straight-way, **FL:** Flanged ends, **DV:** Bonnet extension, **HT:** Temperature up to +200°C
RVA steel shut-off check valve - with damping, stem seal spring-energised PTFE ring for natural gases and liquids (e.g. NH3, CO2) and non-corrosive media according to EN 378-1
Optional: LKL - linear ball bearing from DN 40-200

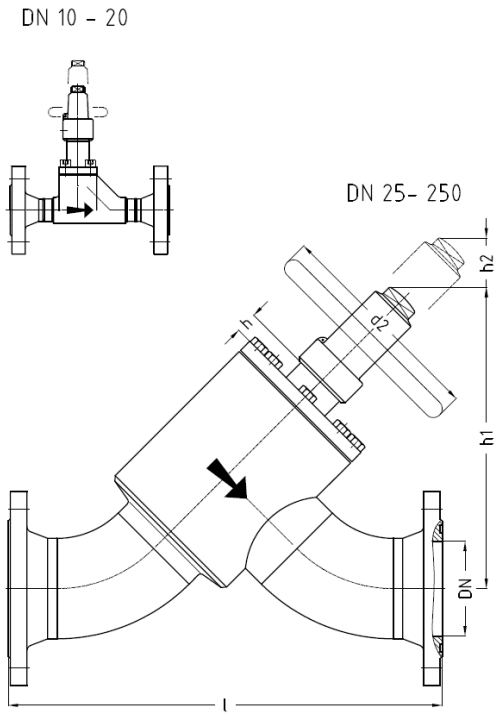

Pressure / temperature operating limits:
PS: Max. permissible operating pressure in bar
TS: Permissible operating temperature in °C associated with the permissible operating pressures (PS)
PN: Nominal pressure rating

DN / INCH	PN	-10	+50	+200	TS [°C]
DN 10...20 3/8"...3/4"	PN25	25	25	25	PS [bar]
	PN40	40	40	40	PS [bar]
	PN63	63	63	63	PS [bar]
DN 25...200 1"...8"	PN25	25	25	25	PS [bar]
	PN40	40	40	40	PS [bar]
	PN63	63	63	63	PS [bar]
DN 250 10"	PN25	25	25	25	PS [bar]
	PN40	40	40	40	PS [bar]

Nominal size:		Flanged ends acc. to:					PN40/PN63, DN10-15:					
		AWP DN10-20 PN25 DN25-80 PN40	PN25 DIN 2634 EN1092-1	PN40 DIN 2635 EN1092-1	PN63 DIN 2636 EN1092-1	ANSI 300 RF	Dimensions h to d2 same as for DN20					
DN	INCH	l	l	l	l	l / l1)	h	h*)	h1	h1*)	h2	d2
10	3/8"	149	156	182	202		45		150		35	60
15	1/2"	149	162	188	202	192/218	45		150		35	60

Latest revision: 05.02.2026. Subject to modifications.
The most recent version of this document is available on awpvalves.com/downloads/

Nominal size:		Flanged ends acc. to:					PN40/PN63, DN10-15:					
20	3/4″	175	192	192	208	228	62		179		45	60
25	1″	230	222	222	258	266	39	78	202	231	70	120
32	1 1/4″	244	240	240	276	286	39	78	206	233	70	120
40	1 1/2″	235	248	248	282	295	43	73	230	251	80	140
50	2″	270	280	280	308	324	43	73	236	259	80	140
65	2 1/2″	365	362	362	394	410	30	78	264	298	100	140
80	3″	413	422	422	450	464	21	77	327	367	110	180
100	4″		518	518	544	560	1	88	344	405	110	180
125	5″		599	599	639	660	29	129	420	491	140	300
150	6″		689	689	729	736	6	107	438	508	150	400
200	8″		870	886	930	932	1	102	604	675	170	630
250	10″		1053	1087		1112	xx		xx		220	630

Table 21: Dimensions

l[1)] PN40/PN63 *) for valves with bonnet extension, h2 = dismantling dimension, DIN/EN flange facings with DIN 2512 groove as standard

26 RVA D FL NIRO HT / RVA D FL DV NIRO HT

D: Straight-way, **FL:** Flanged ends, **DV:** Bonnet extension, **HT:** Temperature up to +200°C
RVA stainless steel shut-off check valve - with damping, stem seal spring-energised PTFE ring for natural gases and liquids (e.g. NH3, CO2) and non-corrosive media according to EN 378-1
Optional: LKL - linear ball bearing from DN 40-200

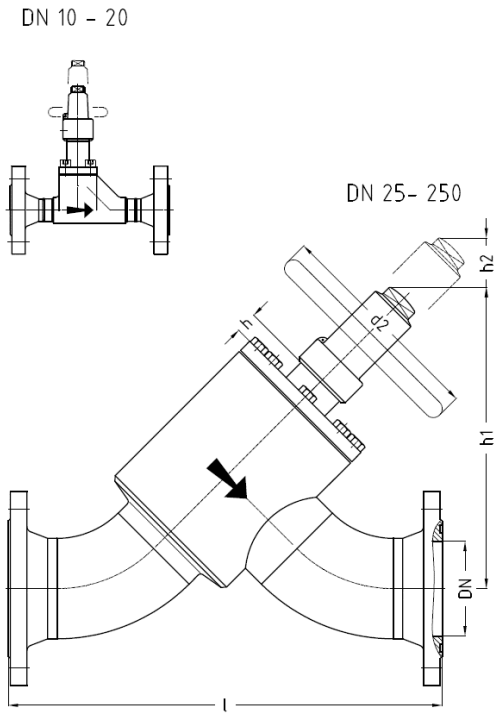

Pressure / temperature operating limits:
PS: Max. permissible operating pressure in bar
TS: Permissible operating temperature in °C associated with the permissible operating pressures (PS)
PN: Nominal pressure rating

DN / INCH	PN	-10	+50	+200	TS [°C]
DN 10...20 3/8"...3/4"	PN25	25	25	25	PS [bar]
	PN40	40	40	40	PS [bar]
	PN63	63	63	63	PS [bar]
DN 25...200 1"...8"	PN25	25	25	25	PS [bar]
	PN40	40	40	40	PS [bar]
	PN63	63	63	63	PS [bar]
DN 250 10"	PN25	25	25	25	PS [bar]
	PN40	40	40	40	PS [bar]

Nominal size:		Flanged ends acc. to:										
		AWP DN10-20 PN25 DN25-80 PN40	PN25 DIN 2634 EN1092-1	PN40 DIN 2635 EN1092-1	PN63 DIN 2636 EN1092-1	ANSI 300 RF						
DN	INCH	l	l	l	l	l	h	h*)	h1	h1*)	h2	d2
10	3/8"	175	182	182	202		62		179		45	60
15	1/2"	175	188	188	202	218	62		179		45	60

Nominal size:		Flanged ends acc. to:										
20	3/4″	175	192	192	208	228	62		179		45	60
25	1″	230	222	222	258	266	39	78	202	231	70	120
32	1 1/4″	244	240	240	276	286	39	78	206	233	70	120
40	1 1/2″	235	248	248	282	295	43	73	230	251	80	140
50	2″	270	280	280	308	324	43	73	236	259	80	140
65	2 1/2″	365	362	362	394	410	30	78	264	298	100	140
80	3″	413	422	422	450	464	21	77	327	367	110	180
100	4″		518	518	544	560	1	88	344	405	110	180
125	5″		599	599	639	660	29	129	420	491	140	300
150	6″		689	689	729	736	6	107	438	508	150	400
200	8″		870	886	930	932	1	102	604	675	170	630
250	10″		1053	1087		1112	xx		xx		220	630

Table 22: Dimensions

*) for valves with bonnet extension, h2 = dismantling dimension, DIN/EN flange facings with DIN 2512 groove as standard

27 RVA E FL HT / RVA E FL DV HT

E: Angle, **FL:** Flanged ends, **DV:** Bonnet extension, **HT:** Temperature up to +200°C
RVA steel shut-off check valve - with damping, stem seal spring-energised PTFE ring for natural gases and liquids (e.g. NH3, CO2) and non-corrosive media according to EN 378-1
Optional: LKL - linear ball bearing from DN 40-200

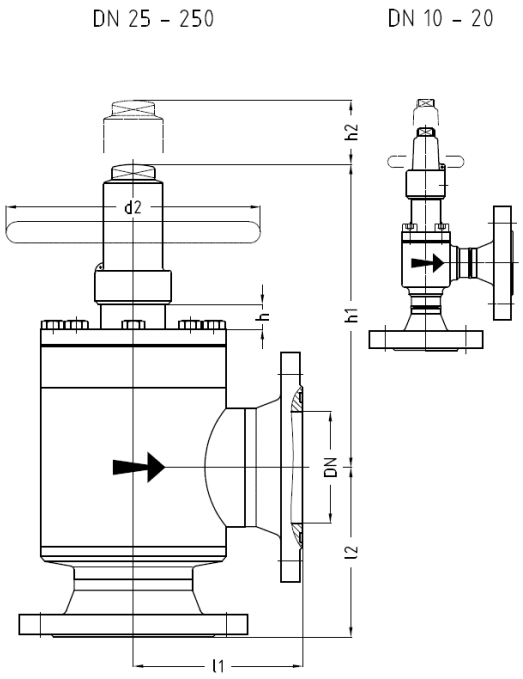

Pressure / temperature operating limits:
PS: Max. permissible operating pressure in bar
TS: Permissible operating temperature in °C associated with the permissible operating pressures (PS)
PN: Nominal pressure rating

DN / INCH	PN	-10	+50	+200	TS [°C]
DN 10...20 3/8"...3/4"	PN25	25	25	25	PS [bar]
	PN40	40	40	40	PS [bar]
	PN63	63	63	63	PS [bar]
DN 25...200 1"...8"	PN25	25	25	25	PS [bar]
	PN40	40	40	40	PS [bar]
	PN63	63	63	63	PS [bar]
DN 250 10"	PN25	25	25	25	PS [bar]
	PN40	40	40	40	PS [bar]

Nominal size:		Flanged ends acc. to:										PN40/PN63, DN10-15:					
		AWP DN10-20 PN25 DN25-80 PN40		PN25 DIN 2634 EN1092-1		PN40 DIN 2635 EN1092-1		PN63 DIN 2636 EN1092-1		ANSI 300 RF		Dimensions h to d2 same as for DN20					
DN	INCH	l1	l2	l1	l2	l1	l2	l1	l2	l1/ l11)	l2/ l21)	h	h*)	h1	h1*)	h2	d2
10	3/8"	67.5	67.5	71	71	77	77	87	87			45		132		35	60
15	1/2"	67.5	67.5	74	74	80	80	87	87	89/95	89/95	45		132		35	60

Nominal size:		Flanged ends acc. to:										PN40/PN63, DN10-15:					
20	3/4″	73.5	73.5	82	82	82	82	90	90	100	100	62		156		45	60
25	1″	105	105	101	101	101	101	119	119	123	123	39	78	200	240	90	120
32	1 1/4″	105	105	103	103	103	103	121	121	126	126	39	78	200	240	90	120
40	1 1/2″	110	110	116	116	116	116	133	133	139	139	43	73	235	265	110	140
50	2″	114	114	119	119	119	119	133	133	141	141	43	73	235	265	110	140
65	2 1/2″	140	140	138	138	138	138	154	154	162	162	30	78	234	282	130	140
80	3″	155	155	159	159	159	159	173	173	180	180	21	77	293	350	150	180
100	4″			186	186	186	186	199	199	207	207	1	88	281	368	150	180
125	5″			204	204	204	204	224	224	235	235	29	129	359	456	190	300
150	6″			226	226	226	226	246	246	250	250	6	107	354	452	210	400
200	8″			276	276	284	284	306	306	307	307	1	102	508	608	240	630
250	10″			325	325	342	342			354	354	xx		xx		300	630

Table 23: Dimensions

l1[1)] , l2[1)] PN40/PN63 *) for valves with bonnet extension, h2 = dismantling dimension DIN/EN flange facings with DIN 2512 groove as standard

28 RVA E FL NIRO HT / RVA E FL DV NIRO HT

E: Angle, **FL:** Flanged ends, **DV:** Bonnet extension, **HT:** Temperature up to +200°C
RVA stainless steel shut-off check valve - with damping, stem seal spring-energised PTFE ring for natural gases and liquids (e.g. NH3, CO2) and non-corrosive media according to EN 378-1
Optional: LKL - linear ball bearing from DN 40-200

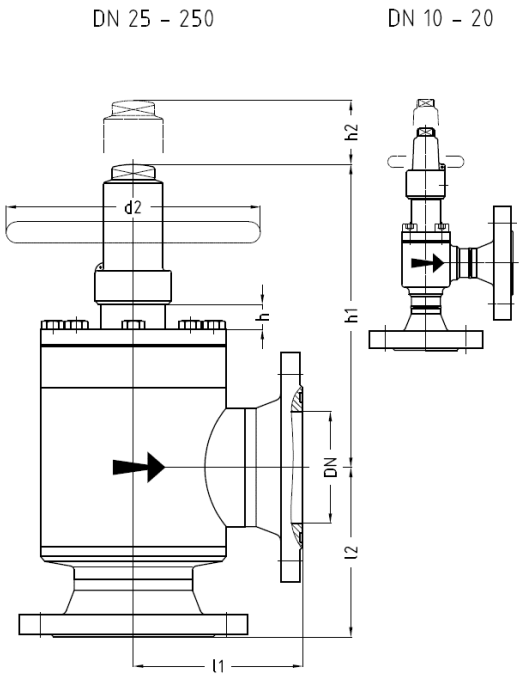

Pressure / temperature operating limits:
PS: Max. permissible operating pressure in bar
TS: Permissible operating temperature in °C associated with the permissible operating pressures (PS)
PN: Nominal pressure rating

DN / INCH	PN	-10	+50	+200	TS [°C]
DN 10...20 3/8"...3/4"	PN25	25	25	25	PS [bar]
	PN40	40	40	40	PS [bar]
	PN63	63	63	63	PS [bar]
DN 25...200 1"...8"	PN25	25	25	25	PS [bar]
	PN40	40	40	40	PS [bar]
	PN63	63	63	63	PS [bar]
DN 250 10"	PN25	25	25	25	PS [bar]
	PN40	40	40	40	PS [bar]

Nominal size:		Flanged ends acc. to:															
		AWP DN10-20 PN25 DN25-80 PN40		PN25 DIN 2634 EN1092-1		PN40 DIN 2635 EN1092-1		PN63 DIN 2636 EN1092-1		ANSI 300 RF							
DN	INCH	l1	l2	l1	l2	l1	l2	l1	l2	l1	l2	h	h*)	h1	h1*)	h2	d2
10	3/8"	73.5	73.5	77	77	77	77	87	87			62		156		45	60
15	1/2"	73.5	73.5	80	80	80	80	87	87	95	95	62		156		45	60

Nominal size:		Flanged ends acc. to:															
20	3/4″	73.5	73.5	82	82	82	82	90	90	100	100	62		156		45	60
25	1″	105	105	101	101	101	101	119	119	123	123	39	78	200	240	90	120
32	1 1/4″	105	105	103	103	103	103	121	121	126	126	39	78	200	240	90	120
40	1 1/2″	110	110	116	116	116	116	133	133	139	139	43	73	235	265	110	140
50	2″	114	114	119	119	119	119	133	133	141	141	43	73	235	265	110	140
65	2 1/2″	140	140	138	138	138	138	154	154	162	162	30	78	234	282	130	140
80	3″	155	155	159	159	159	159	173	173	180	180	21	77	293	350	150	180
100	4″			186	186	186	186	199	199	207	207	1	88	281	368	150	180
125	5″			204	204	204	204	224	224	235	235	29	129	359	456	190	300
150	6″			226	226	226	226	246	246	250	250	6	107	354	452	210	400
200	8″			276	276	284	284	306	306	307	307	1	102	508	608	240	630
250	10″			325	325	342	342			354	354	xx		xx		300	630

Table 24: Dimensions

*) for valves with bonnet extension, h2 = dismantling dimension, DIN/EN flange facings with DIN 2512 groove as standard

29 RVA D LE HT / RVA D LE DV HT

D: Straight-way, **LE:** Soldering ends, **DV:** Bonnet extension, **HT:** Temperature up to +200°C
RVA steel shut-off check valve - with damping, stem seal spring-energised PTFE ring for natural gases and liquids (e.g. NH3, CO2) and non-corrosive media according to EN 378-1
Optional: LKL - linear ball bearing from DN 40-200

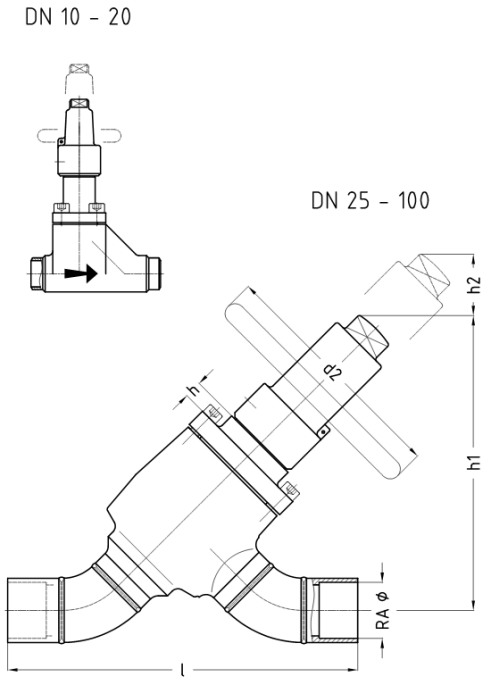

Pressure / temperature operating limits:
PS: Max. permissible operating pressure in bar
TS: Permissible operating temperature in °C associated with the permissible operating pressures (PS)
PN: Nominal pressure rating

DN	PN	-10	+50	+200	TS [°C]
DN 10...20	PN25	25	25	25	PS [bar]
	PN40	40	40	40	PS [bar]
	PN63	63	63	63	PS [bar]
DN 25...100	PN25	25	25	25	PS [bar]
	PN40	40	40	40	PS [bar]
	PN63	63	63	63	PS [bar]

Nominal size:	Soldering ends acc. to:	PN63, DN10-15:						
		Dimensions l to d2 same as for DN20						
DN	RAØ	l	h	h*)	h1	h1*)	h2	d2
10	12	84	45		150		35	60
15	15	84	45		150		35	60
15	18	84	45		150		35	60
20	22	110	62		179		45	60
25	28	212	39	78	202	231	70	120
32	35	236	39	78	206	233	70	120
40	42	238	43	73	230	251	80	140

Nominal size:	Soldering ends acc. to:	PN63, DN10-15:						
50	54	284	43	73	236	259	80	140
65	64	366	30	78	264	298	100	140
65	76	366	30	78	264	298	100	140
80	89	406	21	77	327	367	110	180
100	108	518	1	88	344	405	110	180

Table 25: Dimensions

*) for valves with bonnet extension, h2 = dismantling dimension

30 RVA D LE NIRO HT / RVA D LE DV NIRO HT

D: Straight-way, **LE:** Soldering ends, **DV:** Bonnet extension, **HT:** Temperature up to +200°C
RVA stainless steel shut-off check valve - with damping, stem seal spring-energised PTFE ring for natural gases and liquids (e.g. NH3, CO2) and non-corrosive media according to EN 378-1
Optional: LKL - linear ball bearing from DN 40-200

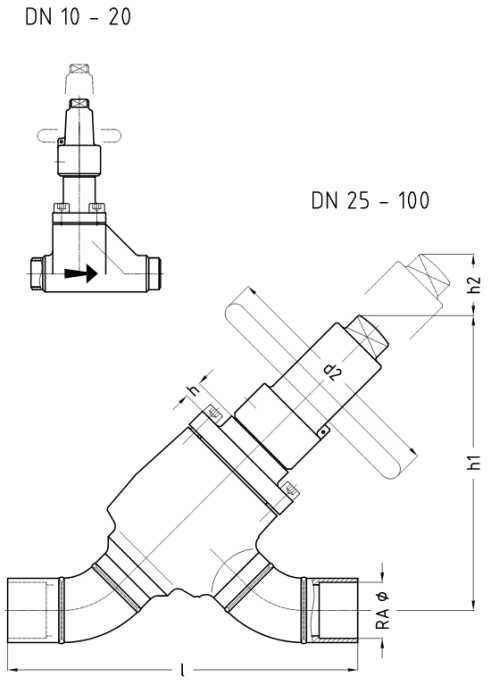

Pressure / temperature operating limits:
PS: Max. permissible operating pressure in bar
TS: Permissible operating temperature in °C associated with the permissible operating pressures (PS)
PN: Nominal pressure rating

DN	PN	-10	+50	+200	TS [°C]
DN 10...20	PN25	25	25	25	PS [bar]
	PN40	40	40	40	PS [bar]
	PN63	63	63	63	PS [bar]
DN 25...100	PN25	25	25	25	PS [bar]
	PN40	40	40	40	PS [bar]
	PN63	63	63	63	PS [bar]

Nominal size:	Soldering ends acc. to:	PN63, DN10-15:						
		Dimensions l to d2 same as for DN20						
DN	RAØ	l	h	h*)	h1	h1*)	h2	d2
10	12	84	45		150		35	60
15	15	84	45		150		35	60
15	18	84	45		150		35	60
20	22	110	62		179		45	60
25	28	212	39	78	202	231	70	120
32	35	236	39	78	206	233	70	120
40	42	238	43	73	230	251	80	140

Latest revision: 05.02.2026. Subject to modifications.
The most recent version of this document is available on awpvalves.com/downloads/

Nominal size:	Soldering ends acc. to:	PN63, DN10-15:						
50	54	284	43	73	236	259	80	140
65	64	366	30	78	264	298	100	140
65	76	366	30	78	264	298	100	140
80	89	406	21	77	327	367	110	180
100	108	518	1	88	344	405	110	180

Table 26: Dimensions

*) for valves with bonnet extension, h2 = dismantling dimension

31 RVA E LE HT / RVA E LE DV HT

E: Angle, **LE:** Soldering ends, **DV:** Bonnet extension, **HT:** Temperature up to +200°C
RVA steel shut-off check valve - with damping, stem seal spring-energised PTFE ring for natural gases and liquids (e.g. NH3, CO2) and non-corrosive media according to EN 378-1
Optional: LKL - linear ball bearing from DN 40-200

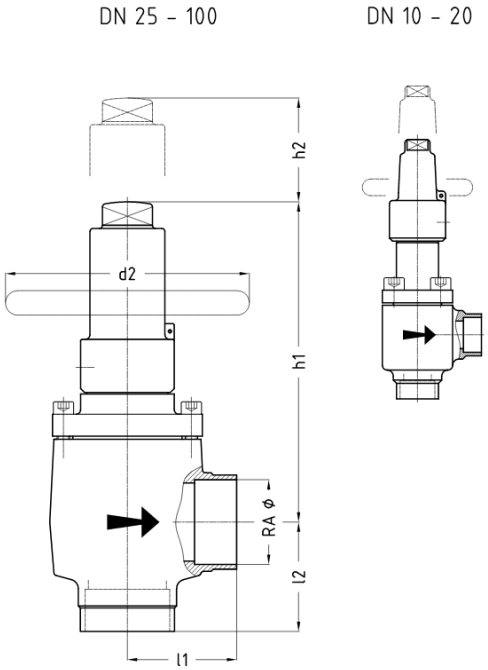

Pressure / temperature operating limits:
PS: Max. permissible operating pressure in bar
TS: Permissible operating temperature in °C associated with the permissible operating pressures (PS)
PN: Nominal pressure rating

DN	PN	-10	+50	+200	TS [°C]
DN 10...20	PN25	25	25	25	PS [bar]
	PN40	40	40	40	PS [bar]
	PN63	63	63	63	PS [bar]
DN 25...100	PN25	25	25	25	PS [bar]
	PN40	40	40	40	PS [bar]
	PN63	63	63	63	PS [bar]

Nominal size:	Soldering ends acc. to:	PN63, DN10-15:							
		Dimensions l1 to d2 same as for DN20							
DN	RAØ	l1	l2	h	h*)	h1	h1*)	h2	d2
10	12	35	35	45		132		35	60
15	15	35	35	45		132		35	60
15	18	35	35	45		132		35	60
20	22	41	41	62		156		45	60
25	28	60	60	39	78	200	240	90	120
32	35	60	60	39	78	200	240	90	120
40	42	70	70	43	73	235	265	110	140

Latest revision: 05.02.2026. Subject to modifications.
The most recent version of this document is available on awpvalves.com/downloads/

Nominal size:	Soldering ends acc. to:	PN63, DN10-15:							
50	54	70	70	43	73	235	265	110	140
65	64	140	140	30	78	234	282	130	140
65	76	140	140	30	78	234	282	130	140
80	89	151	151	21	77	293	350	150	180
100	108	186	186	1	88	281	368	150	180

Table 27: Dimensions

*) for valves with bonnet extension, h2 = dismantling dimension

32 RVA E LE NIRO HT / RVA E LE DV NIRO HT

E: Angle, **LE:** Soldering ends, **DV:** Bonnet extension, **HT:** Temperature up to +200°C
RVA stainless steel shut-off check valve - with damping, stem seal spring-energised PTFE ring for natural gases and liquids (e.g. NH3, CO2) and non-corrosive media according to EN 378-1
Optional: LKL - linear ball bearing from DN 40-200

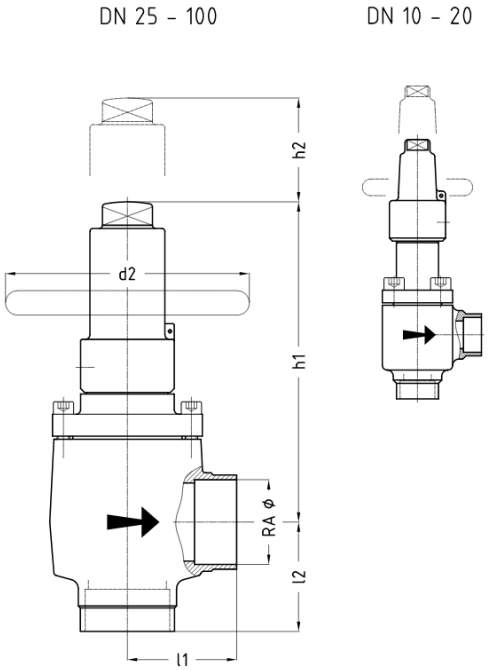

Pressure / temperature operating limits:
PS: Max. permissible operating pressure in bar
TS: Permissible operating temperature in °C associated with the permissible operating pressures (PS)
PN: Nominal pressure rating

DN	PN	-10	+50	+200	TS [°C]
DN 10...20	PN25	25	25	25	PS [bar]
	PN40	40	40	40	PS [bar]
	PN63	63	63	63	PS [bar]
DN 25...100	PN25	25	25	25	PS [bar]
	PN40	40	40	40	PS [bar]
	PN63	63	63	63	PS [bar]

Nominal size:	Soldering ends acc. to:	PN40/63, DN10-15:							
		Dimensions l1 to d2 same as for DN20							
DN	RAØ	l1	l2	h	h*)	h1	h1*)	h2	d2
10	12	35	35	45		132		35	60
15	15	35	35	45		132		35	60
15	18	35	35	45		132		35	60
20	22	41	41	62		156		45	60
25	28	60	60	39	78	200	240	90	120
32	35	60	60	39	78	200	240	90	120
40	42	70	70	43	73	235	265	110	140

Latest revision: 05.02.2026. Subject to modifications.
The most recent version of this document is available on awpvalves.com/downloads/

Nominal size:	Soldering ends acc. to:	PN40/63, DN10-15:							
50	54	70	70	43	73	235	265	110	140
65	64	140	140	30	78	234	282	130	140
65	76	140	140	30	78	234	282	130	140
80	89	151	151	21	77	293	350	150	180
100	108	186	186	1	88	281	368	150	180

Table 28: Dimensions

*) for valves with bonnet extension, h2 = dismantling dimension

33 RVA D SE HT

D: Straight-way, **SE:** Screwed ends,**HT:** Temperature up to +200°C
RVA steel shut-off check valve - with damping, stem seal spring-energised PTFE ring for natural gases and liquids (e.g. NH3, CO2) and non-corrosive media according to EN 378-1

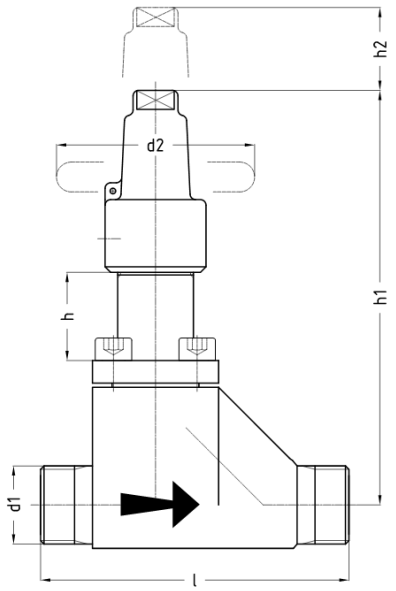

NOTICE! Installation lengths (l) may vary due to the different threads.
Pressure / temperature operating limits:
PS: Max. permissible operating pressure in bar
TS: Permissible operating temperature in °C associated with the permissible operating pressures (PS)
PN: Nominal pressure rating

DN	PN	-10	+50	+200	TS [°C]
DN 8...20	PN25	25	25	25	PS [bar]
	PN40	40	40	40	PS [bar]
	PN63	63	63	63	PS [bar]

Nominal size:	Screwed ends acc. to:	PN40/63, DN8:				
		Dimensions l to d2 same as for DN20				
DN	d1	l	h	h1	h2	d2
8	For coding, connections, see **Coding of connections for small and service valves [▶ 115]**	84	45	150	35	60
20		110	62	179	45	60

Table 29: Dimensions
h2 = dismantling dimension

34 RVA D SE NIRO HT

D: Straight-way, **SE:** Screwed ends,**HT:** Temperature up to +200°C
RVA stainless steel shut-off check valve - with damping, stem seal spring-energised PTFE ring for natural gases and liquids (e.g. NH3, CO2) and non-corrosive media according to EN 378-1

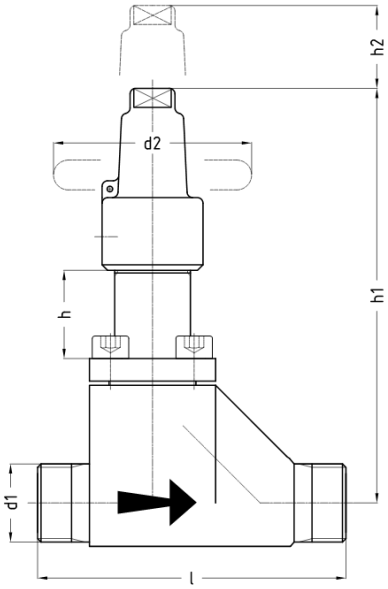

NOTICE! Installation lengths (l) may vary due to the different threads.
Pressure / temperature operating limits:
PS: Max. permissible operating pressure in bar
TS: Permissible operating temperature in °C associated with the permissible operating pressures (PS)
PN: Nominal pressure rating

DN	PN	-10	+50	+200	TS [°C]
DN 8...20	PN25	25	25	25	PS [bar]
	PN40	40	40	40	PS [bar]
	PN63	63	63	63	PS [bar]

Nominal size:	Screwed ends acc. to:	PN40/63, DN8:				
		Dimensions l to d2 same as for DN20				
DN	d1	l	h	h1	h2	d2
8	For coding, connections, see **Coding of connections for small and service valves [▶ 115]**	84	45	150	35	60
20		110	62	179	45	60

Table 30: Dimensions
h2 = dismantling dimension

35 RVA E SE HT

I: Angle, **SE:** Screwed ends, **HT:** Temperature up to +200°C
RVA steel shut-off check valve - with damping, stem seal spring-energised PTFE ring for natural gases and liquids (e.g. NH3, CO2) and non-corrosive media according to EN 378-1

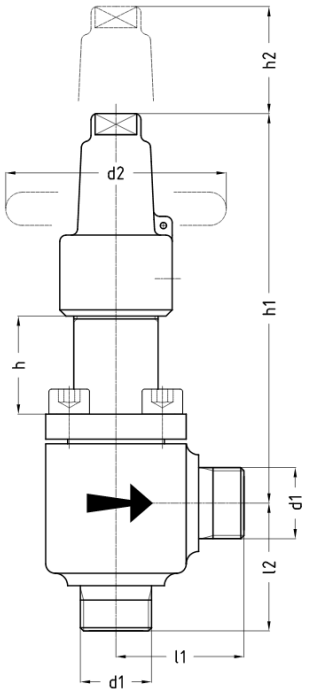

NOTICE! Installation lengths (l) may vary due to the different threads.
Pressure / temperature operating limits:
PS: Max. permissible operating pressure in bar
TS: Permissible operating temperature in °C associated with the permissible operating pressures (PS)
PN: Nominal pressure rating

DN	PN	-10	+50	+200	TS [°C]
DN 8...20	PN25	25	25	25	PS [bar]
	PN40	40	40	40	PS [bar]
	PN63	63	63	63	PS [bar]

Nominal size:	Screwed ends acc. to:	PN63, DN8:					
		Dimensions l1 to d2 same as for DN20					
DN	d1	l1	l2	h	h1	h2	d2
8	For coding, connections, see **Coding of connections for small and service valves [▶ 115]**	35	35	45	132	35	60
20		41	41	62	156	45	60

Table 31: Dimensions
h2 = dismantling dimension

36 RVA E SE NIRO HT

I: Angle, **SE:** Screwed ends, **HT:** Temperature up to +200°C
RVA stainless steel shut-off check valve - with damping, stem seal spring-energised PTFE ring for natural gases and liquids (e.g. NH3, CO2) and non-corrosive media according to EN 378-1

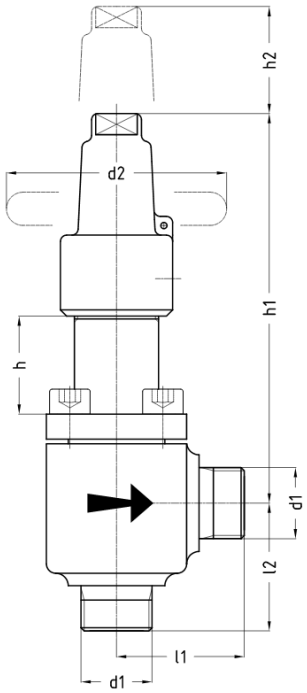

NOTICE! Installation lengths (l) may vary due to the different threads.
Pressure / temperature operating limits:
PS: Max. permissible operating pressure in bar
TS: Permissible operating temperature in °C associated with the permissible operating pressures (PS)
PN: Nominal pressure rating

DN	PN	-10	+50	+200	TS [°C]
DN 8...20	PN25	25	25	25	PS [bar]
	PN40	40	40	40	PS [bar]
	PN63	63	63	63	PS [bar]

Nominal size:	Screwed ends acc. to:	PN40/63, DN8:					
		Dimensions l1 to d2 same as for DN20					
DN	d1	l1	l2	h	h1	h2	d2
8	For coding, connections, see **Coding of connections for small and service valves [▶ 115]**	35	35	45	132	35	60
20		41	41	62	156	45	60

Table 32: Dimensions
h2 = dismantling dimension

37 RVAK materials

Designation and materials

RVAK HT - shut-off check valve with regulating cone

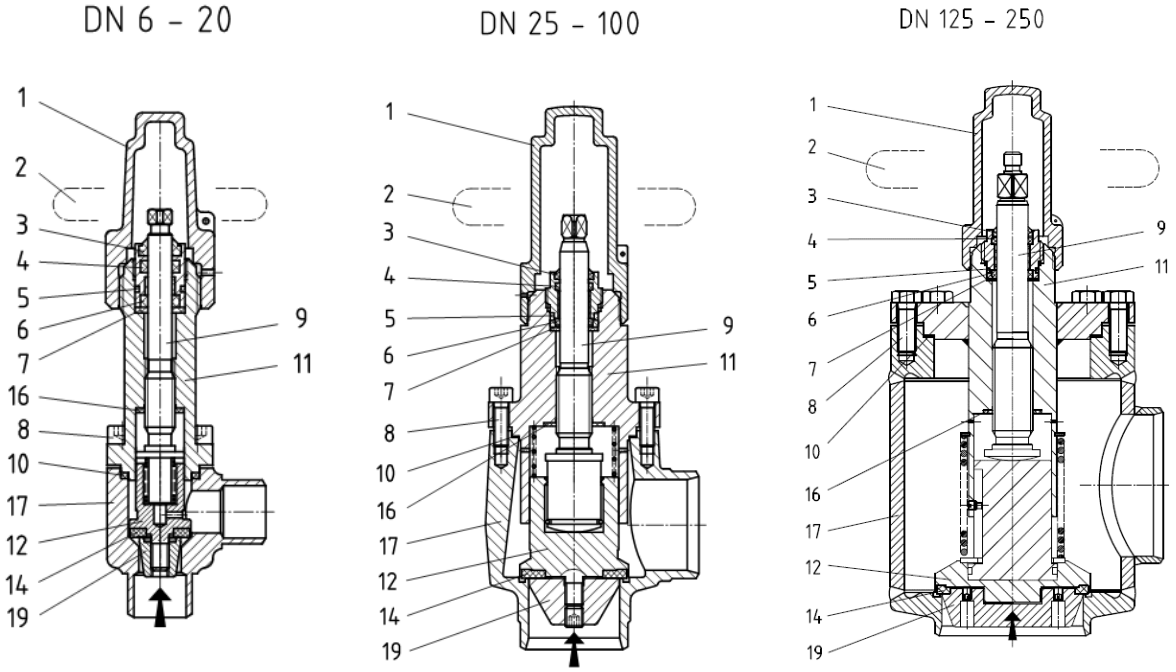

	Part:	Material for steel valves	Material for stainless steel valves
1	Cap	Aluminium AlSi10Mg	Aluminium AlSi10Mg
2	Handwheel	Steel	Steel
3	Wiper ring	NBR	NBR
4	O-ring A	CR, NBR, HNBR, EPDM, FPM*	CR, NBR, HNBR, EPDM, FPM*
5	O-ring B	CR, NBR, HNBR, EPDM, FPM*	CR, NBR, HNBR, EPDM, FPM*
6	Spring-loaded U-ring	PTFE	PTFE
7	Flat sealing ring for threaded bush	AFM30	AFM30
8	Bonnet screw	8.8	A2-70
9	Stem	X8CrNiS18-9 1.4305	X8CrNiS18-9 1.4305
10	Flat sealing ring for bonnet	AFM30	AFM30
11	Bonnet	S355J2 1.0577	X8CrNiS18-9 1.4305 X5CrNi18-10 1.4301 X2CrNi19-11 1.4306
12	Valve disc	S355J2 1.0577	X8CrNiS18-9 1.4305 X5CrNi18-10 1.4301
14	Flat sealing ring for valve disc	PTFE	PTFE
16	Back seal	AFM30	AFM30

	Part:	Material for steel valves	Material for stainless steel valves
17	Body	P235GH 1.0345 S355J2 1.0577 P355N 1.0562	X5CrNi18-10 1.4301
19	Regulating cone	S355J2 1.0577	X8CrNiS18-9 1.4305 X5CrNi18-10 1.4301

Table 33: * depending on the refrigerant used

38 RVAK D AE HT / RVAK D AE DV HT

D: Straight-way, **AE:** Welding ends, **DV:** Bonnet extension, **HT:** Temperature up to +200°C
RVAK steel shut-off check valve - regulating cone, damping, stem seal spring-energised PTFE ring for natural gases and liquids (e.g. NH3, CO2) and non-corrosive media according to EN 378-1
Optional: LKL - linear ball bearing from DN 40-200

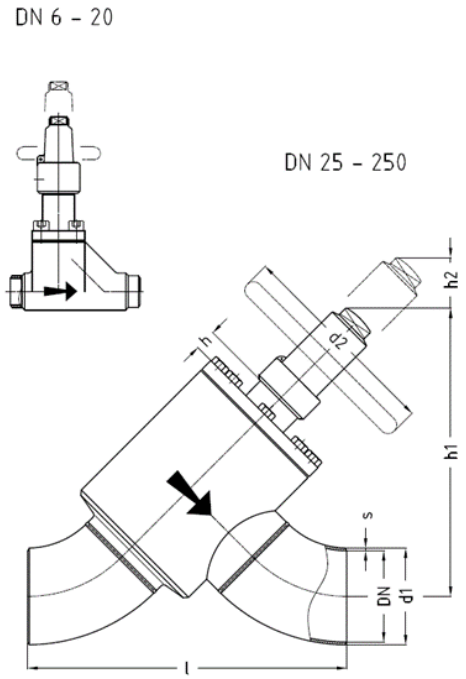

Pressure / temperature operating limits:
PS: Max. permissible operating pressure in bar
TS: Permissible operating temperature in °C associated with the permissible operating pressures (PS)
PN: Nominal pressure rating

DN / INCH	PN	-10	+50	+200	TS [°C]
DN 6...20 1/8"...3/4"	PN25	25	25	25	PS [bar]
	PN40	40	40	40	PS [bar]
	PN63	63	63	63	PS [bar]
DN 25...200 1"...8"	PN25	25	25	25	PS [bar]
	PN40	40	40	40	PS [bar]
	PN63	63	63	63	PS [bar]
DN 250 10"	PN25	25	25	25	PS [bar]
	PN40	40	40	40	PS [bar]

Nominal size:		Welding ends acc. to:									PN63, DN10-15:						
		ISO Series 1			ISO Series 2		ANSI Sched 40		ANSI Sched 80		Dimensions l to d2 same as for DN20						
DN	INCH	d1	s1)	s2)	d1	s	d1	s	d1	s	l	h	h*)	h1	h1*)	h2	d2
6	1/8"	10.2	1.6	1.6			10.3	1.7	10.3	2.4	84	45		150		35	60
8	1/4"	13.5	1.8	1.8			13.7	2.2	13.7	3.0	84	45		150		35	60
10	3/8"	17.2	1.8	1.8	15.0	2.5	17.1	2.3	17.1	3.2	84	45		150		35	60

Latest revision: 05.02.2026. Subject to modifications.
The most recent version of this document is available on awpvalves.com/downloads/

Nominal size:		Welding ends acc. to:									PN63, DN10-15:						
15	1/2"	21.3	2.0	2.0	20.0	2.5	21.3	2.8	21.3	3.7	84	45		150		35	60
20	3/4"	26.9	2.3	2.6	25.0	2.5	26.7	2.9	26.7	3.9	110	62		179		45	60
25	1"	33.7	2.6	2.6	32.0	3.0	33.4	3.4	33.4	4.5	140	39	78	202	231	70	120
32	1 1/4"	42.4	2.6	2.9	38.0	3.0	42.2	3.6	42.2	4.8	154	39	78	206	233	70	120
40	1 1/2"	48.3	2.6	2.9	45.0	3.0	48.3	3.7	48.3	5.1	156	43	73	230	251	80	140
50	2"	60.3	2.9	2.9	57.0	3.2	60.3	3.9			182	43	73	236	259	80	140
65	2 1/2"	76.1	2.9	3.2	76.1	3.6	73.0	5.2			256	30	78	264	298	100	140
80	3"	88.9	3.2	3.6	88.9	4.0	88.9	5.5			304	21	77	327	367	110	180
100	4"	114.3	3.6	4.0	108.0	4.0	114.3	6.0			386	1	88	344	405	110	180
125	5"	139.7	4.0	4.5	133.0	4.0	141.3	6.6			461	29	129	420	491	140	300
150	6"	168.3	4.5	5.6	159.0	4.5	168.3	7.1			537	6	107	438	508	150	400
200	8"	219.1	6.3	7.1			219.1	8.2			708	1	102	608	675	170	630
250	10"	273.0	7.1				273.0	9.3			775	xx		xx		220	630

Table 34: Dimensions

1) PN25 / PN40 2) PN63 *) for valves with bonnet extension, h2 = dismantling dimension

39 RVAK D AE NIRO HT / RVAK D AE DV NIRO HT

D: Straight-way, **AE:** Welding ends, **DV:** Bonnet extension, **HT:** Temperature up to +200°C
RVAK stainless steel shut-off check valve - regulating cone, damping, stem seal spring-energised PTFE ring for natural gases and liquids (e.g. NH3, CO2) and non-corrosive media according to EN 378-1
Optional: LKL - linear ball bearing from DN 40-200

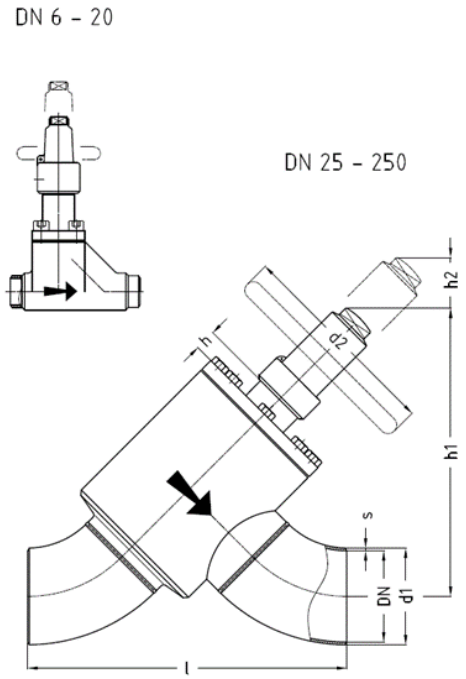

Pressure / temperature operating limits:
PS: Max. permissible operating pressure in bar
TS: Permissible operating temperature in °C associated with the permissible operating pressures (PS)
PN: Nominal pressure rating

DN / INCH	PN	-10	+50	+200	TS [°C]
DN 6...20 1/8"...3/4"	PN25	25	25	25	PS [bar]
	PN40	40	40	40	PS [bar]
	PN63	63	63	63	PS [bar]
DN 25...200 1"...8"	PN25	25	25	25	PS [bar]
	PN40	40	40	40	PS [bar]
	PN63	63	63	63	PS [bar]
DN 250 10"	PN25	25	25	25	PS [bar]
	PN40	40	40	40	PS [bar]

Nominal size:		Welding ends acc. to:									PN63, DN10-15:						
		ISO Series 1			ISO Series 2		ANSI Sched 40		ANSI Sched 80		Dimensions l to d2 same as for DN20						
DN	INCH	d1	s1)	s2)	d1	s	d1	s	d1	s	l	h	h*)	h1	h1*)	h2	d2
6	1/8"	10.2	1.6	1.6			10.3	1.7	10.3	2.4	84	45		150		35	60
8	1/4"	13.5	1.8	1.8			13.7	2.2	13.7	3.0	84	45		150		35	60
10	3/8"	17.2	1.8	1.8	15.0	2.5	17.1	2.3	17.1	3.2	84	45		150		35	60

Nominal size:		Welding ends acc. to:									PN63, DN10-15:						
15	1/2"	21.3	2.0	2.0	20.0	2.5	21.3	2.8	21.3	3.7	84	45		150		35	60
20	3/4"	26.9	2.3	2.6	25.0	2.5	26.7	2.9	26.7	3.9	110	62		179		45	60
25	1"	33.7	2.6	2.6	32.0	3.0	33.4	3.4	33.4	4.5	140	39	78	202	231	70	120
32	1 1/4"	42.4	2.6	2.9	38.0	3.0	42.2	3.6	42.2	4.8	154	39	78	206	233	70	120
40	1 1/2"	48.3	2.6	2.9	45.0	3.0	48.3	3.7	48.3	5.1	156	43	73	230	251	80	140
50	2"	60.3	2.9	2.9	57.0	3.2	60.3	3.9			182	43	73	236	259	80	140
65	2 1/2"	76.1	2.9	3.2	76.1	3.6	73.0	5.2			256	30	78	264	298	100	140
80	3"	88.9	3.2	3.6	88.9	4.0	88.9	5.5			304	21	77	327	367	110	180
100	4"	114.3	3.6	4.0	108.0	4.0	114.3	6.0			386	1	88	344	405	110	180
125	5"	139.7	4.0	4.5	133.0	4.0	141.3	6.6			461	29	129	420	491	140	300
150	6"	168.3	4.5	5.6	159.0	4.5	168.3	7.1			537	6	107	438	508	150	400
200	8"	219.1	6.3	7.1			219.1	8.2			708	1	102	608	675	170	630
250	10"	273.0	7.1				273.0	9.3			775	xx		xx		220	630

Table 35: Dimensions

1) PN25 / PN40 2) PN63 *) for valves with bonnet extension, h2 = dismantling dimension

40 RVAK E AE HT / RVAK E AE DV HT

E: Angle, **AE:** Welding ends, **DV:** Bonnet extension, **HT:** Temperature up to +200°C
RVAK steel shut-off check valve - with regulating cone and damping for natural gases and liquids (e.g. NH3, CO2) and non-corrosive media according to EN 378-1 Optional: LKL - linear ball bearing from DN 40-200

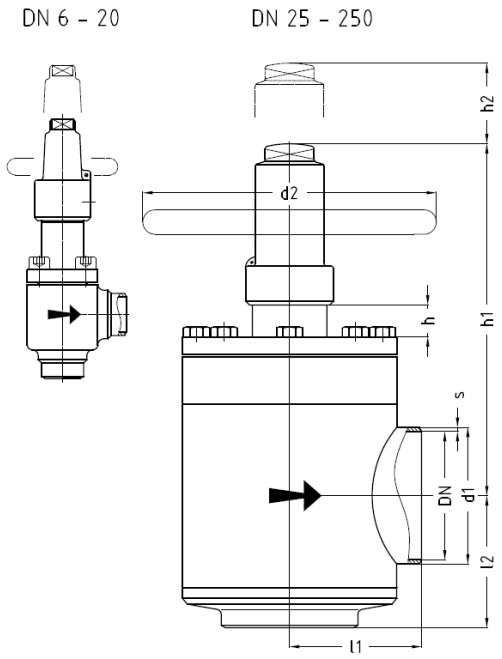

Pressure / temperature operating limits:
PS: Max. permissible operating pressure in bar
TS: Permissible operating temperature in °C associated with the permissible operating pressures (PS)
PN: Nominal pressure rating

DN / INCH	PN	-10	+50	+200	TS [°C]
DN 6...20 1/8"...3/4"	PN25	25	25	25	PS [bar]
	PN40	40	40	40	PS [bar]
	PN63	63	63	63	PS [bar]
DN 25...200 1"...8"	PN25	25	25	25	PS [bar]
	PN40	40	40	40	PS [bar]
	PN63	63	63	63	PS [bar]
DN 250 10"	PN25	25	25	25	PS [bar]
	PN40	40	40	40	PS [bar]

Nominal size:		Welding ends acc. to:									PN63, DN10-15:							
		ISO Series 1			ISO Series 2		ANSI Sched 40		ANSI Sched 80		Dimensions l1 to d2 same as for DN20							
DN	INCH	d1	s1)	s2)	d1	s	d1	s	d1	s	l1	l2	h	h*)	h1	h1*)	h2	d2
6	1/8"	10.2	1.6	1.6			10.3	1.7	10.3	2.4	35	35	45		132		35	60
8	1/4"	13.5	1.8	1.8			13.7	2.2	13.7	3.0	35	35	45		132		35	60
10	3/8"	17.2	1.8	1.8	15.0	2.5	17.1	2.3	17.1	3.2	35	35	45		132		35	60

Latest revision: 05.02.2026. Subject to modifications.
The most recent version of this document is available on awpvalves.com/downloads/

Nominal size:		Welding ends acc. to:									PN63, DN10-15:							
15	1/2"	21.3	2.0	2.0	20.0	2.5	21.3	2.8	21.3	3.7	35	35	45		132		35	60
20	3/4"	26.9	2.3	2.6	25.0	2.5	26.7	2.9	26.7	3.9	41	41	62		156		45	60
25	1"	33.7	2.6	2.6	32.0	3.0	33.4	3.4	33.4	4.5	60	60	39	78	200	240	90	120
32	1 1/4"	42.4	2.6	2.9	38.0	3.0	42.2	3.6	42.2	4.8	60	60	39	78	200	240	90	120
40	1 1/2"	48.3	2.6	2.9	45.0	3.0	48.3	3.7	48.3	5.1	70	70	43	73	235	265	110	140
50	2"	60.3	2.9	2.9	57.0	3.2	60.3	3.9			70	70	43	73	235	265	110	140
65	2 1/2"	76.1	2.9	3.2	76.1	3.6	73.0	5.2			85	85	30	78	234	282	130	140
80	3"	88.9	3.2	3.6	88.9	4.0	88.9	5.5			100	100	21	77	293	350	150	180
100	4"	114.3	3.6	4.0	108.0	4.0	114.3	6.0			120	120	1	88	281	368	150	180
125	5"	139.7	4.0	4.5	133.0	4.0	141.3	6.6			135	135	29	129	359	456	190	300
150	6"	168.3	4.5	5.6	159.0	4.5	168.3	7.1			150	150	6	107	354	452	210	400
200	8"	219.1	6.3	7.1			219.1	8.2			195	195	1	102	508	608	240	630
250	10"	273.0	7.1				273.0	9.3			236	236	xx		xx		300	630

Table 36: Dimensions

1) PN25 / PN40 2) PN63 *) for valves with bonnet extension, h2 = dismantling dimension

41 RVAK E AE NIRO HT / RVAK E AE DV NIRO HT

E: Angle, **AE:** Welding ends, **DV:** Bonnet extension, **HT:** Temperature up to +200°C
RVAK stainless steel shut-off check valve - regulating cone, damping, stem seal spring-energised PTFE ring for natural gases and liquids (e.g. NH3, CO2) and non-corrosive media according to EN 378-1
Optional: LKL - linear ball bearing from DN 40-200

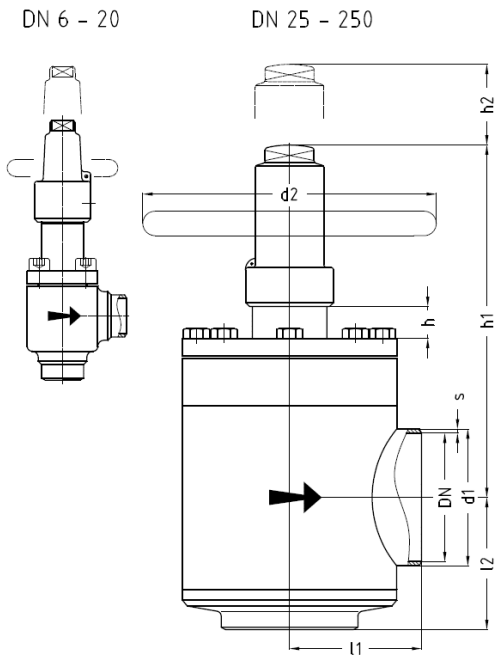

Pressure / temperature operating limits:
PS: Max. permissible operating pressure in bar
TS: Permissible operating temperature in °C associated with the permissible operating pressures (PS)
PN: Nominal pressure rating

DN / INCH	PN	-10	+50	+200	TS [°C]
DN 6...20 1/8"...3/4"	PN25	25	25	25	PS [bar]
	PN40	40	40	40	PS [bar]
	PN63	63	63	63	PS [bar]
DN 25...200 1"...8"	PN25	25	25	25	PS [bar]
	PN40	40	40	40	PS [bar]
	PN63	63	63	63	PS [bar]
DN 250 10"	PN25	25	25	25	PS [bar]
	PN40	40	40	40	PS [bar]

Nominal size:		Welding ends acc. to:									PN63, DN10-15:							
		ISO Series 1			ISO Series 2		ANSI Sched 40		ANSI Sched 80		Dimensions l1 to d2 same as for DN20							
DN	INCH	d1	s1)	s2)	d1	s	d1	s	d1	s	l1	l2	h	h*)	h1	h1*)	h2	d2
6	1/8"	10.2	1.6	1.6			10.3	1.7	10.3	2.4	35	35	45		132		35	60
8	1/4"	13.5	1.8	1.8			13.7	2.2	13.7	3.0	35	35	45		132		35	60
10	3/8"	17.2	1.8	1.8	15.0	2.5	17.1	2.3	17.1	3.2	35	35	45		132		35	60

Nominal size:		Welding ends acc. to:									PN63, DN10-15:							
15	1/2"	21.3	2.0	2.0	20.0	2.5	21.3	2.8	21.3	3.7	35	35	45		132		35	60
20	3/4"	26.9	2.3	2.6	25.0	2.5	26.7	2.9	26.7	3.9	41	41	62		156		45	60
25	1"	33.7	2.6	2.6	32.0	3.0	33.4	3.4	33.4	4.5	60	60	39	78	200	240	90	120
32	1 1/4"	42.4	2.6	2.9	38.0	3.0	42.2	3.6	42.2	4.8	60	60	39	78	200	240	90	120
40	1 1/2"	48.3	2.6	2.9	45.0	3.0	48.3	3.7	48.3	5.1	70	70	43	73	235	265	110	140
50	2"	60.3	2.9	2.9	57.0	3.2	60.3	3.9			70	70	43	73	235	265	110	140
65	2 1/2"	76.1	2.9	3.2	76.1	3.6	73.0	5.2			85	85	30	78	234	282	130	140
80	3"	88.9	3.2	3.6	88.9	4.0	88.9	5.5			100	100	21	77	293	350	150	180
100	4"	114.3	3.6	4.0	108.0	4.0	114.3	6.0			120	120	1	88	281	368	150	180
125	5"	139.7	4.0	4.5	133.0	4.0	141.3	6.6			135	135	29	129	359	456	190	300
150	6"	168.3	4.5	5.6	159.0	4.5	168.3	7.1			150	150	6	107	354	452	210	400
200	8"	219.1	6.3	7.1			219.1	8.2			195	195	1	102	508	608	240	630
250	10"	273.0	7.1				273.0	9.3			236	236	xx		xx		300	630

Table 37: Dimensions

1) PN25 / PN40 2) PN63 *) for valves with bonnet extension, h2 = dismantling dimension

42 RVAK D FL HT / RVAK D FL DV HT

D: Straight-way, **FL:** Flanged ends, **DV:** Bonnet extension, **HT:** Temperature up to +200°C
RVAK steel shut-off check valve - regulating cone, damping, stem seal spring-energised PTFE ring for natural gases and liquids (e.g. NH3, CO2) and non-corrosive media according to EN 378-1
Optional: LKL - linear ball bearing from DN 40-200

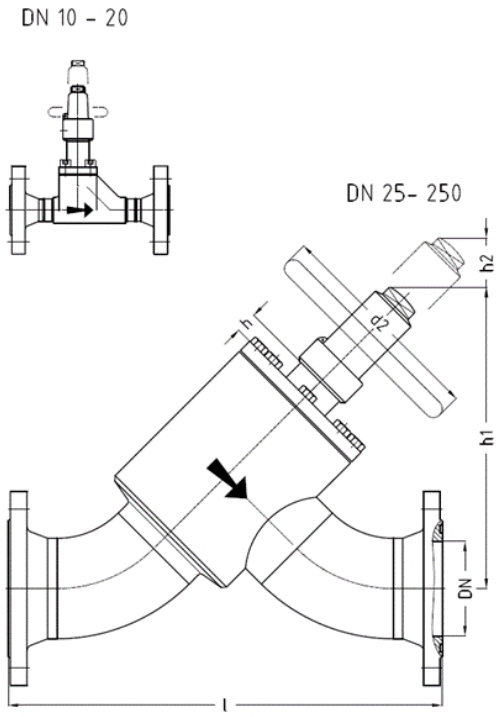

Pressure / temperature operating limits:
PS: Max. permissible operating pressure in bar
TS: Permissible operating temperature in °C associated with the permissible operating pressures (PS)
PN: Nominal pressure rating

DN / INCH	PN	-10	+50	+200	TS [°C]
DN 10...20 3/8"...3/4"	PN25	25	25	25	PS [bar]
	PN40	40	40	40	PS [bar]
	PN63	63	63	63	PS [bar]
DN 25...200 1"...8"	PN25	25	25	25	PS [bar]
	PN40	40	40	40	PS [bar]
	PN63	63	63	63	PS [bar]
DN 250 10"	PN25	25	25	25	PS [bar]
	PN40	40	40	40	PS [bar]

Nominal size:		Flanged ends acc. to:					PN40/PN63, DN10-15:					
		AWP DN10-20 PN25 DN25-80 PN40	PN25 DIN 2634 EN1092-1	PN40 DIN 2635 EN1092-1	PN63 DIN 2636 EN1092-1	ANSI 300 RF	Dimensions h to d2 same as for DN20					
DN	INCH	l	l	l	l	l / l1)	h	h*)	h1	h1*)	h2	d2
10	3/8"	149	156	182	202		45		150		35	60
15	1/2"	149	162	188	202	192/218	45		150		35	60

Latest revision: 05.02.2026. Subject to modifications.
The most recent version of this document is available on awpvalves.com/downloads/

Nominal size:		Flanged ends acc. to:					PN40/PN63, DN10-15:					
20	3/4″	175	192	192	208	228	62		179		45	60
25	1″	230	222	222	258	266	39	78	202	231	70	120
32	1 1/4″	244	240	240	276	286	39	78	206	233	70	120
40	1 1/2″	235	248	248	282	295	43	73	230	251	80	140
50	2″	270	280	280	308	324	43	73	236	259	80	140
65	2 1/2″	365	362	362	394	410	30	78	264	298	100	140
80	3″	413	422	422	450	464	21	77	327	367	110	180
100	4″		518	518	544	560	1	88	344	405	110	180
125	5″		599	599	639	660	29	129	420	491	140	300
150	6″		689	689	729	736	6	107	438	508	150	400
200	8″		870	886	930	932	1	102	604	675	170	630
250	10″		1053	1087		1112	xx		xx		220	630

Table 38: Dimensions

l[1)] PN40/PN63 *) for valves with bonnet extension, h2 = dismantling dimension, DIN/EN flange facings with DIN 2512 groove as standard

43 RVAK D FL NIRO HT / RVAK D FL DV NIRO HT

D: Straight-way, **FL:** Flanged ends, **DV:** Bonnet extension, **HT:** Temperature up to +200°C
RVAK stainless steel shut-off check valve - regulating cone, damping, stem seal spring-energised PTFE ring for natural gases and liquids (e.g. NH3, CO2) and non-corrosive media according to EN 378-1
Optional: LKL - linear ball bearing from DN 40-200

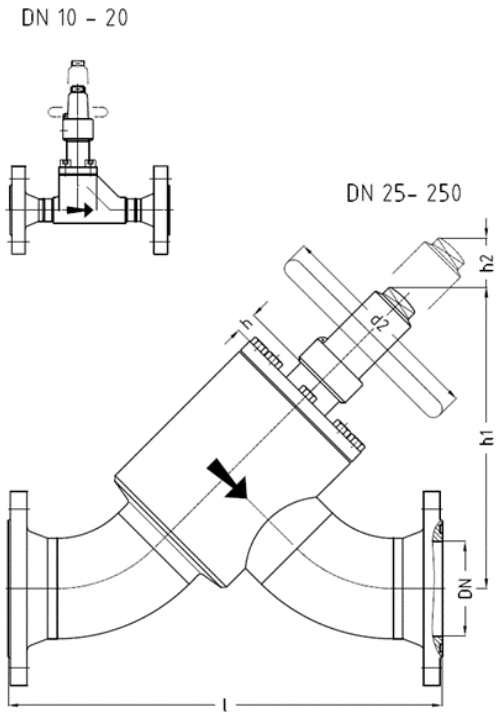

Pressure / temperature operating limits:
PS: Max. permissible operating pressure in bar
TS: Permissible operating temperature in °C associated with the permissible operating pressures (PS)
PN: Nominal pressure rating

DN / INCH	PN	-10	+50	+200	TS [°C]
DN 10...20 3/8”...3/4”	PN25	25	25	25	PS [bar]
	PN40	40	40	40	PS [bar]
	PN63	63	63	63	PS [bar]
DN 25...200 1”...8”	PN25	25	25	25	PS [bar]
	PN40	40	40	40	PS [bar]
	PN63	63	63	63	PS [bar]
DN 250 10”	PN25	25	25	25	PS [bar]
	PN40	40	40	40	PS [bar]

Nominal size:		Flanged ends acc. to:										
		AWP DN10-20 PN25 DN25-80 PN40	PN25 DIN 2634 EN1092-1	PN40 DIN 2635 EN1092-1	PN63 DIN 2636 EN1092-1	ANSI 300 RF						
DN	INCH	l	l	l	l	l	h	h*)	h1	h1*)	h2	d2
10	3/8”	175	182	182	202		62		179		45	60
15	1/2”	175	188	188	202	218	62		179		45	60

Nominal size:		Flanged ends acc. to:										
20	3/4″	175	192	192	208	228	62		179		45	60
25	1″	230	222	222	258	266	39	78	202	231	70	120
32	1 1/4″	244	240	240	276	286	39	78	206	233	70	120
40	1 1/2″	235	248	248	282	295	43	73	230	251	80	140
50	2″	270	280	280	308	324	43	73	236	259	80	140
65	2 1/2″	365	362	362	394	410	30	78	264	298	100	140
80	3″	413	422	422	450	464	21	77	327	367	110	180
100	4″		518	518	544	560	1	88	344	405	110	180
125	5″		599	599	639	660	29	129	420	491	140	300
150	6″		689	689	729	736	6	107	438	508	150	400
200	8″		870	886	930	932	1	102	604	675	170	630
250	10″		1053	1087		1112	xx		xx		220	630

Table 39: Dimensions

*) for valves with bonnet extension, h2 = dismantling dimension, DIN/EN flange facings with DIN 2512 groove as standard

44 RVAK E FL HT / RVAK E FL DV HT

E: Angle, **FL:** Flanged ends, **DV:** Bonnet extension, **HT:** Temperature up to +200°C
RVAK steel shut-off check valve - regulating cone, damping, stem seal spring-energised PTFE ring for natural gases and liquids (e.g. NH3, CO2) and non-corrosive media according to EN 378-1
Optional: LKL - linear ball bearing from DN 40-200

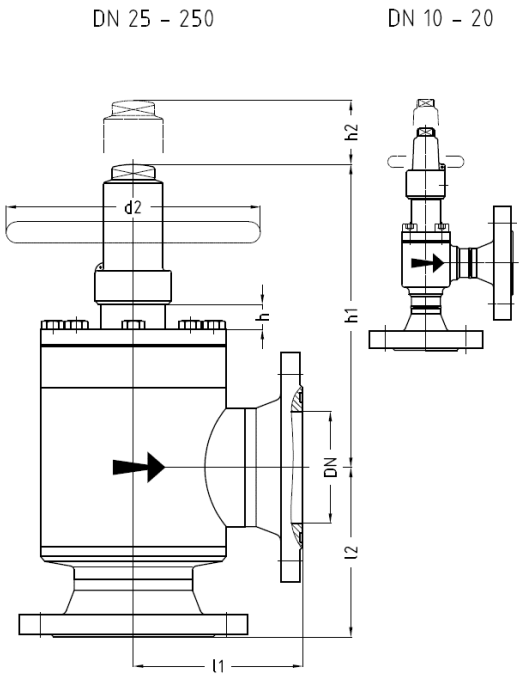

Pressure / temperature operating limits:
PS: Max. permissible operating pressure in bar
TS: Permissible operating temperature in °C associated with the permissible operating pressures (PS)
PN: Nominal pressure rating

DN / INCH	PN	-10	+50	+200	TS [°C]
DN 10...20 3/8"...3/4"	PN25	25	25	25	PS [bar]
	PN40	40	40	40	PS [bar]
	PN63	63	63	63	PS [bar]
DN 25...200 1"...8"	PN25	25	25	25	PS [bar]
	PN40	40	40	40	PS [bar]
	PN63	63	63	63	PS [bar]
DN 250 10"	PN25	25	25	25	PS [bar]
	PN40	40	40	40	PS [bar]

Nominal size:		Flanged ends acc. to:										PN40/PN63, DN10-15:					
		AWP DN10-20 PN25 DN25-80 PN40		PN25 DIN 2634 EN1092-1		PN40 DIN 2635 EN1092-1		PN63 DIN 2636 EN1092-1		ANSI 300 RF		Dimensions h to d2 same as for DN20					
DN	INCH	l1	l2	l1	l2	l1	l2	l1	l2	l1/ l11)	l2/ l21)	h	h*)	h1	h1*)	h2	d2
10	3/8"	67.5	67.5	71	71	77	77	87	87			45		132		35	60
15	1/2"	67.5	67.5	74	74	80	80	87	87	89/95	89/95	45		132		35	60

Nominal size:		Flanged ends acc. to:										PN40/PN63, DN10-15:					
20	3/4″	73.5	73.5	82	82	82	82	90	90	100	100	62		156		45	60
25	1″	105	105	101	101	101	101	119	119	123	123	39	78	200	240	90	120
32	1 1/4″	105	105	103	103	103	103	121	121	126	126	39	78	200	240	90	120
40	1 1/2″	110	110	116	116	116	116	133	133	139	139	43	73	235	265	110	140
50	2″	114	114	119	119	119	119	133	133	141	141	43	73	235	265	110	140
65	2 1/2″	140	140	138	138	138	138	154	154	162	162	30	78	234	282	130	140
80	3″	155	155	159	159	159	159	173	173	180	180	21	77	293	350	150	180
100	4″			186	186	186	186	199	199	207	207	1	88	281	368	150	180
125	5″			204	204	204	204	224	224	235	235	29	129	359	456	190	300
150	6″			226	226	226	226	246	246	250	250	6	107	354	452	210	400
200	8″			276	276	284	284	306	306	307	307	1	102	508	608	240	630
250	10″			325	325	342	342			354	354	xx		xx		300	630

Table 40: Dimensions

l1[1)] , l2[1)] PN40/PN63 *) for valves with bonnet extension, h2 = dismantling dimension DIN/EN flange facings with DIN 2512 groove as standard

45 RVAK E FL NIRO HT / RVAK E FL DV NIRO HT

E: Angle, **FL:** Flanged ends, **DV:** Bonnet extension, **HT:** Temperature up to +200°C
RVAK stainless steel shut-off check valve - regulating cone, damping, stem seal spring-energised PTFE ring for natural gases and liquids (e.g. NH3, CO2) and non-corrosive media according to EN 378-1
Optional: LKL - linear ball bearing from DN 40-200

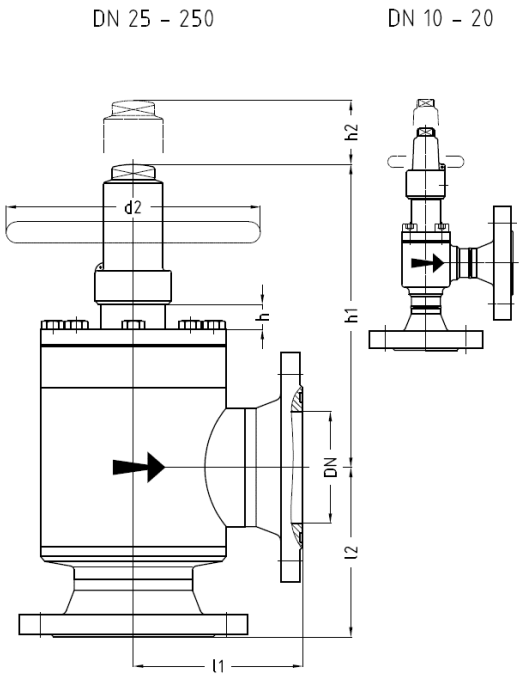

Pressure / temperature operating limits:
PS: Max. permissible operating pressure in bar
TS: Permissible operating temperature in °C associated with the permissible operating pressures (PS)
PN: Nominal pressure rating

DN / INCH	PN	-10	+50	+200	TS [°C]
DN 10...20 3/8"...3/4"	PN25	25	25	25	PS [bar]
	PN40	40	40	40	PS [bar]
	PN63	63	63	63	PS [bar]
DN 25...200 1"...8"	PN25	25	25	25	PS [bar]
	PN40	40	40	40	PS [bar]
	PN63	63	63	63	PS [bar]
DN 250 10"	PN25	25	25	25	PS [bar]
	PN40	40	40	40	PS [bar]

Nominal size:		Flanged ends acc. to:															
		AWP DN10-20 PN25 DN25-80 PN40		PN25 DIN 2634 EN1092-1		PN40 DIN 2635 EN1092-1		PN63 DIN 2636 EN1092-1		ANSI 300 RF							
DN	INCH	l1	l2	l1	l2	l1	l2	l1	l2	l1	l2	h	h*)	h1	h1*)	h2	d2
10	3/8"	73.5	73.5	77	77	77	77	87	87			62		156		45	60
15	1/2"	73.5	73.5	80	80	80	80	87	87	95	95	62		156		45	60

Nominal size:		Flanged ends acc. to:															
20	3/4″	73.5	73.5	82	82	82	82	90	90	100	100	62		156		45	60
25	1″	105	105	101	101	101	101	119	119	123	123	39	78	200	240	90	120
32	1 1/4″	105	105	103	103	103	103	121	121	126	126	39	78	200	240	90	120
40	1 1/2″	110	110	116	116	116	116	133	133	139	139	43	73	235	265	110	140
50	2″	114	114	119	119	119	119	133	133	141	141	43	73	235	265	110	140
65	2 1/2″	140	140	138	138	138	138	154	154	162	162	30	78	234	282	130	140
80	3″	155	155	159	159	159	159	173	173	180	180	21	77	293	350	150	180
100	4″			186	186	186	186	199	199	207	207	1	88	281	368	150	180
125	5″			204	204	204	204	224	224	235	235	29	129	359	456	190	300
150	6″			226	226	226	226	246	246	250	250	6	107	354	452	210	400
200	8″			276	276	284	284	306	306	307	307	1	102	508	608	240	630
250	10″			325	325	342	342			354	354	xx		xx		300	630

Table 41: Dimensions

*) for valves with bonnet extension, h2 = dismantling dimension, DIN/EN flange facings with DIN 2512 groove as standard

46 RVAK D LE HT / RVAK D LE DV HT

D: Straight-way, **LE:** Soldering ends, **DV:** Bonnet extension **HT:** Temperature up to +200°C
RVAK steel shut-off check valve - regulating cone, damping, stem seal spring-energised PTFE ring for natural gases and liquids (e.g. NH3, CO2) and non-corrosive media according to EN 378-1
Optional: LKL - linear ball bearing from DN 40-200

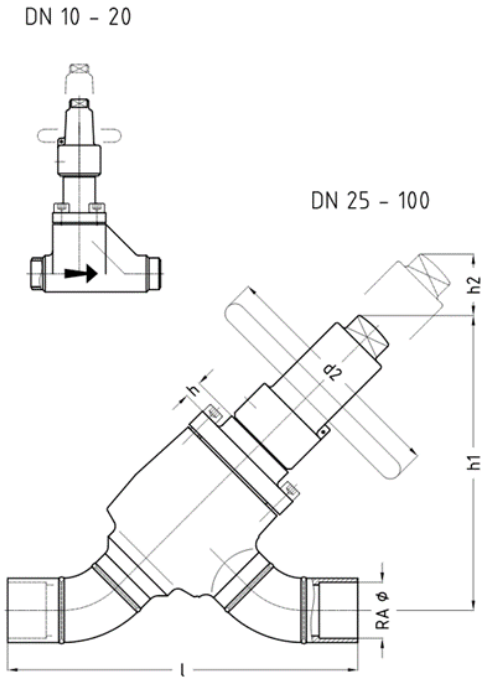

Pressure / temperature operating limits:
PS: Max. permissible operating pressure in bar
TS: Permissible operating temperature in °C associated with the permissible operating pressures (PS)
PN: Nominal pressure rating

DN	PN	-10	+50	+200	TS [°C]
DN 10...20	PN25	25	25	25	PS [bar]
	PN40	40	40	40	PS [bar]
	PN63	63	63	63	PS [bar]
DN 25...100	PN25	25	25	25	PS [bar]
	PN40	40	40	40	PS [bar]
	PN63	63	63	63	PS [bar]

Nominal size:	Soldering ends acc. to:	PN63, DN10-15:						
		Dimensions l to d2 same as for DN20						
DN	RAØ	l	h	h*)	h1	h1*)	h2	d2
10	12	84	45		150		35	60
15	15	84	45		150		35	60
15	18	84	45		150		35	60
20	22	110	62		179		45	60
25	28	212	39	78	202	231	70	120
32	35	236	39	78	206	233	70	120
40	42	238	43	73	230	251	80	140

Nominal size:	Soldering ends acc. to:	PN63, DN10-15:						
50	54	284	43	73	236	259	80	140
65	64	366	30	78	264	298	100	140
65	76	366	30	78	264	298	100	140
80	89	406	21	77	327	367	110	180
100	108	518	1	88	344	405	110	180

Table 42: Dimensions

*) for valves with bonnet extension, h2 = dismantling dimension

47 RVAK D LE NIRO HT / RVAK D LE DV NIRO HT

D: Straight-way, **LE:** Soldering ends, **DV:** Bonnet extension, **HT:** Temperature up to +200°C
RVAK stainless steel shut-off check valve - regulating cone, damping, stem seal spring-energised PTFE ring for natural gases and liquids (e.g. NH3, CO2) and non-corrosive media according to EN 378-1
Optional: LKL - linear ball bearing from DN 40-200

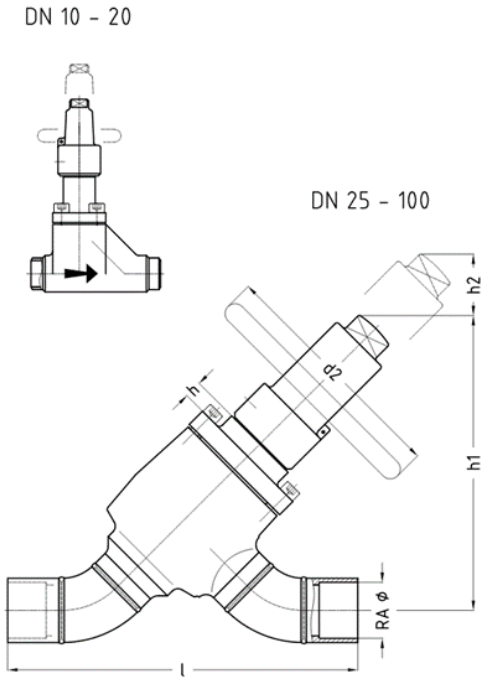

Pressure / temperature operating limits:
PS: Max. permissible operating pressure in bar
TS: Permissible operating temperature in °C associated with the permissible operating pressures (PS)
PN: Nominal pressure rating

DN	PN	-10	+50	+200	TS [°C]
DN 10...20	PN25	25	25	25	PS [bar]
	PN40	40	40	40	PS [bar]
	PN63	63	63	63	PS [bar]
DN 25...100	PN25	25	25	25	PS [bar]
	PN40	40	40	40	PS [bar]
	PN63	63	63	63	PS [bar]

Nominal size:	Soldering ends acc. to:	PN63, DN 10-15						
		Dimensions l to d2 same as for DN20						
DN	RAØ	l	h	h*)	h1	h1*)	h2	d2
10	12	84	45		150		35	60
15	15	84	45		150		35	60
15	18	84	45		150		35	60
20	22	110	62		179		45	60
25	28	212	39	78	202	231	70	120
32	35	236	39	78	206	233	70	120
40	42	238	43	73	230	251	80	140

Latest revision: 05.02.2026. Subject to modifications.
The most recent version of this document is available on awpvalves.com/downloads/

Nominal size:	Soldering ends acc. to:	PN63, DN 10-15						
50	54	284	43	73	236	259	80	140
65	64	366	30	78	264	298	100	140
65	76	366	30	78	264	298	100	140
80	89	406	21	77	327	367	110	180
100	108	518	1	88	344	405	110	180

Table 43: Dimensions

*) for valves with bonnet extension, h2 = dismantling dimension

48 RVAK E LE HT / RVAK E LE DV HT

E: Angle, **LE:** Soldering ends, **DV:** Bonnet extension, **HT:** Temperature up to +200°C
RVAK steel shut-off check valve - regulating cone, damping, stem seal spring-energised PTFE ring for natural gases and liquids (e.g. NH3, CO2) and non-corrosive media according to EN 378-1
Optional: LKL - linear ball bearing from DN 40-200

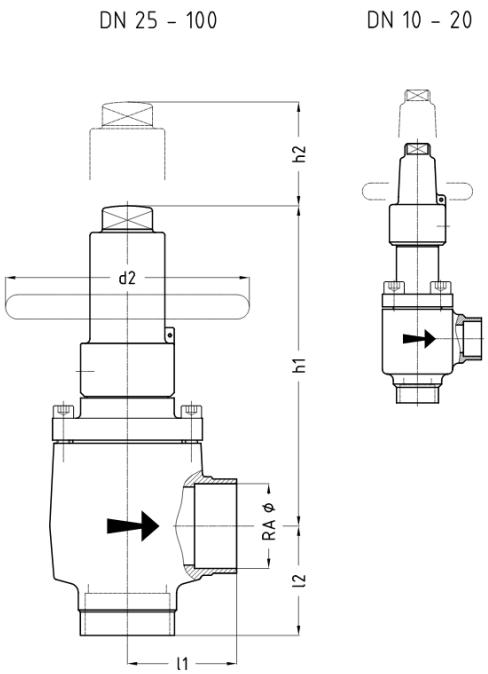

Pressure / temperature operating limits:
PS: Max. permissible operating pressure in bar
TS: Permissible operating temperature in °C associated with the permissible operating pressures (PS)
PN: Nominal pressure rating

DN	PN	-10	+50	+200	TS [°C]
DN 10...100	PN25	25	25	25	PS [bar]
	PN40	40	40	40	PS [bar]
	PN63	63	63	63	PS [bar]

Nominal size:	Soldering ends acc. to:	PN63, DN10-15:							
		Dimensions l1 to d2 same as for DN20							
DN	RAØ	l1	l2	h	h*)	h1	h1*)	h2	d2
10	12	35	35	45		132		35	60
15	15	35	35	45		132		35	60
15	18	35	35	45		132		35	60
20	22	41	41	62		156		45	60
25	28	60	60	39	78	200	240	90	120
32	35	60	60	39	78	200	240	90	120
40	42	70	70	43	73	235	265	110	140
50	54	70	70	43	73	235	265	110	140
65	64	140	140	30	78	234	282	130	140
65	76	140	140	30	78	234	282	130	140

Latest revision: 05.02.2026. Subject to modifications.
The most recent version of this document is available on awpvalves.com/downloads/

Nominal size:	Soldering ends acc. to:	PN63, DN10-15:							
80	89	151	151	21	77	293	350	150	180
100	108	186	186	1	88	281	368	150	180

Table 44: Dimensions

*) for valves with bonnet extension, h2 = dismantling dimension

49 RVAK E LE NIRO HT / RVAK E LE DV NIRO HT

E: Angle, **LE:** Soldering ends, **DV:** Bonnet extension, **HT:** Temperature up to +200°C
RVAK stainless steel shut-off check valve - regulating cone, damping, stem seal spring-energised PTFE ring for natural gases and liquids (e.g. NH3, CO2) and non-corrosive media according to EN 378-1
Optional: LKL - linear ball bearing from DN 40-200

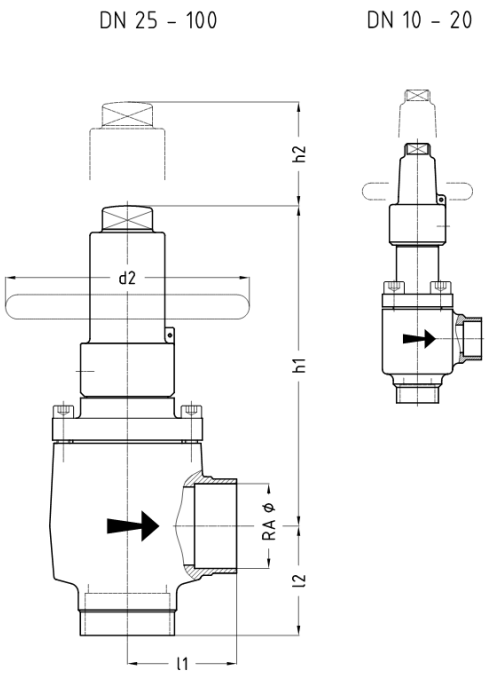

Pressure / temperature operating limits:
PS: Max. permissible operating pressure in bar
TS: Permissible operating temperature in °C associated with the permissible operating pressures (PS)
PN: Nominal pressure rating

DN	PN	-10	+50	+200	TS [°C]
DN 10...100	PN25	25	25	25	PS [bar]
	PN40	40	40	40	PS [bar]
	PN63	63	63	63	PS [bar]

Nominal size:	Soldering ends acc. to:	PN40/63, DN10-15:							
		Dimensions l1 to d2 same as for DN20							
DN	RAØ	l1	l2	h	h*)	h1	h1*)	h2	d2
10	12	35	35	45		132		35	60
15	15	35	35	45		132		35	60
15	18	35	35	45		132		35	60
20	22	41	41	62		156		45	60
25	28	60	60	39	78	200	240	90	120
32	35	60	60	39	78	200	240	90	120
40	42	70	70	43	73	235	265	110	140
50	54	70	70	43	73	235	265	110	140
65	64	140	140	30	78	234	282	130	140
65	76	140	140	30	78	234	282	130	140

Latest revision: 05.02.2026. Subject to modifications.
The most recent version of this document is available on awpvalves.com/downloads/

Nominal size:	Soldering ends acc. to:	PN40/63, DN10-15:							
80	89	151	151	21	77	293	350	150	180
100	108	186	186	1	88	281	368	150	180

Table 45: Dimensions

*) for valves with bonnet extension, h2 = dismantling dimension

50 RVAK D SE HT

D: Straight-way, **SE:** Screwed ends,**HT:** Temperature up to +200°C
RVAK steel shut-off check valve - regulating cone, damping, stem seal spring-energised PTFE ring for natural gases and liquids (e.g. NH3, CO2) and non-corrosive media according to EN 378-1

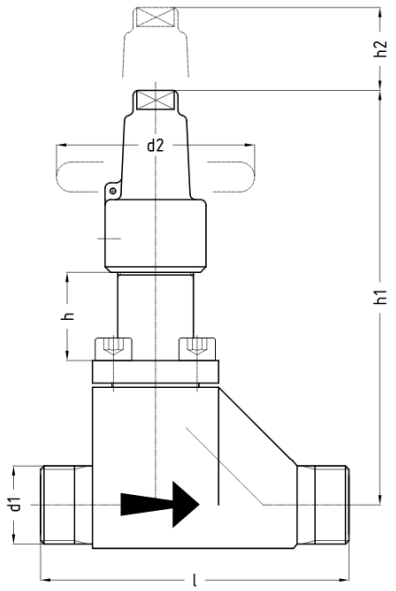

NOTICE! Installation lengths (l) may vary due to the different threads.
Pressure / temperature operating limits:
PS: Max. permissible operating pressure in bar
TS: Permissible operating temperature in °C associated with the permissible operating pressures (PS)
PN: Nominal pressure rating

DN	PN	-10	+50	+200	TS [°C]
DN 8...20	PN25	25	25	25	PS [bar]
	PN40	40	40	40	PS [bar]
	PN63	63	63	63	PS [bar]

Nominal size:	Screwed ends acc. to:	PN63, DN8:				
		Dimensions l to d2 same as for DN20				
DN	d1	l	h	h1	h2	d2
8	For coding, connections, see **Coding of connections for small and service valves [▶ 115]**	84	45	150	35	60
20		110	62	179	45	60

Table 46: Dimensions
h2 = dismantling dimension

51 RVAK D SE NIRO HT

D: Straight-way, **SE:** Screwed ends,**HT:** Temperature up to +200°C
RVAK stainless steel shut-off check valve - regulating cone, damping, stem seal spring-energised PTFE ring for natural gases and liquids (e.g. NH3, CO2) and non-corrosive media according to EN 378-1

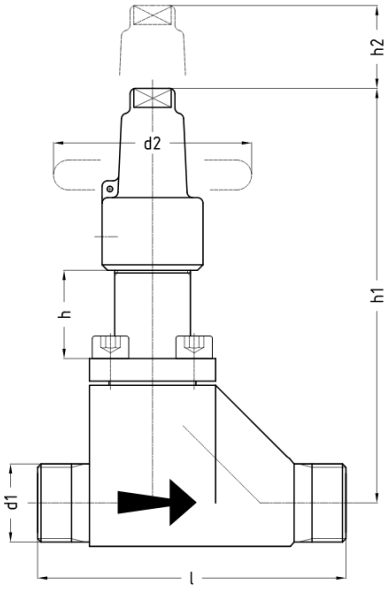

NOTICE! Installation lengths (l) may vary due to the different threads.
Pressure / temperature operating limits:
PS: Max. permissible operating pressure in bar
TS: Permissible operating temperature in °C associated with the permissible operating pressures (PS)
PN: Nominal pressure rating

DN	PN	-10	+50	+200	TS [°C]
DN 8...20	PN25	25	25	25	PS [bar]
	PN40	40	40	40	PS [bar]
	PN63	63	63	63	PS [bar]

Nominal size:	Screwed ends acc. to:	PN40/63, DN8:				
		Dimensions l to d2 same as for DN20				
DN	d1	l	h	h1	h2	d2
8	For coding, connections, see **Coding of connections for small and service valves** **[▶ 115]**	84	45	150	35	60
20		110	62	179	45	60

Table 47: Dimensions
h2 = dismantling dimension

52 RVAK E SE HT

I: Angle, **SE:** Screwed ends, **HT:** Temperature up to +200°C
RVAK steel shut-off check valve - regulating cone, damping, stem seal spring-energised PTFE ring for natural gases and liquids (e.g. NH3, CO2) and non-corrosive media according to EN 378-1

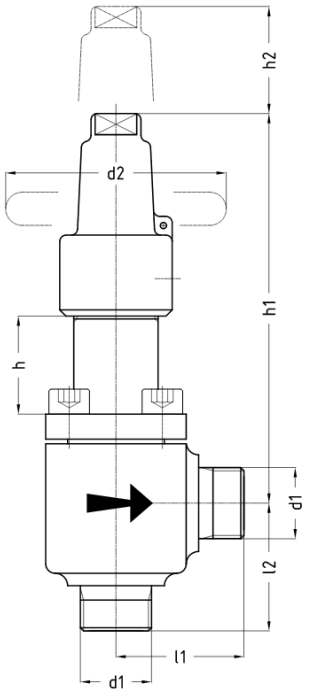

NOTICE! Installation lengths (l) may vary due to the different threads.
Pressure / temperature operating limits:
PS: Max. permissible operating pressure in bar
TS: Permissible operating temperature in °C associated with the permissible operating pressures (PS)
PN: Nominal pressure rating

DN	PN	-10	+50	+200	TS [°C]
DN 8...20	PN25	25	25	25	PS [bar]
	PN40	40	40	40	PS [bar]
	PN63	63	63	63	PS [bar]

Nominal size:	Screwed ends acc. to:	PN63, DN8:					
		Dimensions l1 to d2 same as for DN20					
DN	d1	l1	l2	h	h1	h2	d2
8	For coding, connections, see **Coding of connections for small and service valves [▶ 115]**	35	35	45	132	35	60
20		41	41	62	156	45	60

Table 48: Dimensions
h2 = dismantling dimension

53 RVAK E SE NIRO HT

I: Angle, **SE:** Screwed ends, **HT:** Temperature up to +200°C
RVAK stainless steel shut-off check valve - regulating cone, damping, stem seal spring-energised PTFE ring for natural gases and liquids (e.g. NH3, CO2) and non-corrosive media according to EN 378-1

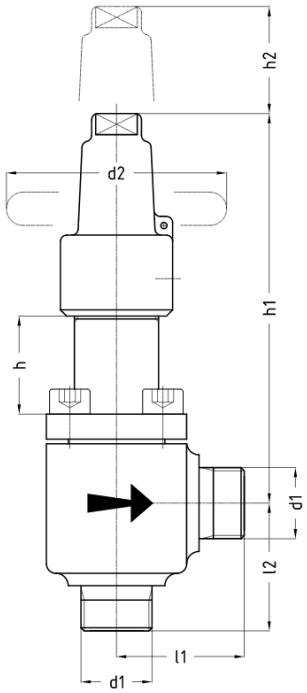

NOTICE! Installation lengths (l) may vary due to the different threads.
Pressure / temperature operating limits:
PS: Max. permissible operating pressure in bar
TS: Permissible operating temperature in °C associated with the permissible operating pressures (PS)
PN: Nominal pressure rating

DN	PN	-10	+50	+200	TS [°C]
DN 8...20	PN25	25	25	25	PS [bar]
	PN40	40	40	40	PS [bar]
	PN63	63	63	63	PS [bar]

Nominal size:	Screwed ends acc. to:	PN40/63, DN8:					
		Dimensions l1 to d2 same as for DN20					
DN	d1	l1	l2	h	h1	h2	d2
8	For coding, connections, see **Coding of connections for small and service valves [▶ 115]**	35	35	45	132	35	60
20		41	41	62	156	45	60

Table 49: Dimensions
h2 = dismantling dimension

54 RVZ materials

Designation and materials
RVZ HT - check valve

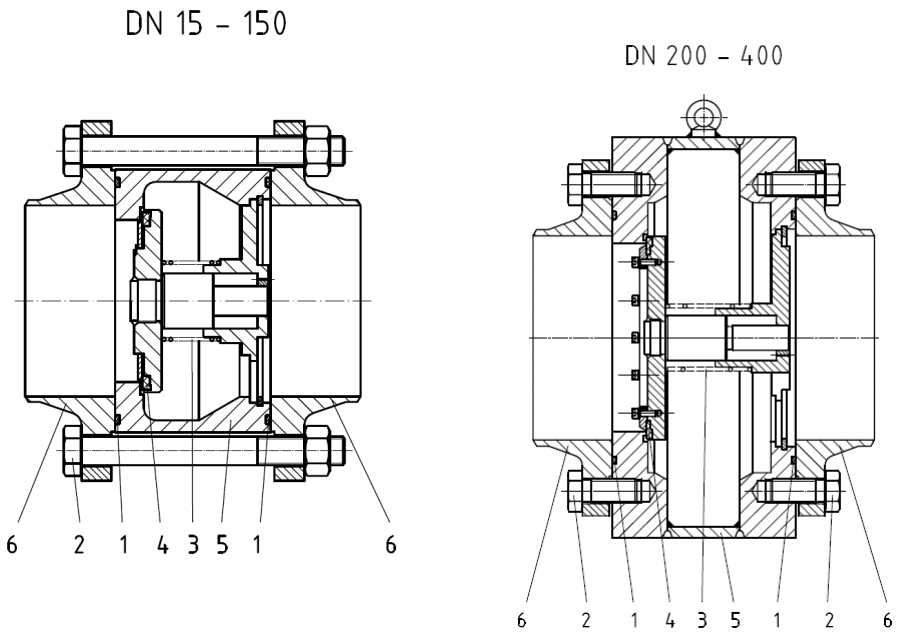

	Part	Material for steel valves	Material for stainless steel valves
1	Body gasket	CR, NBR, HNBR, EPDM, FPM*	CR, NBR, HNBR, EPDM, FPM*
2	Body screw	8.8	A2-70
3	Tongue	X10CrNi18-8 1.4310	X10CrNi18-8 1.4310
4	Flat sealing ring for valve disc	PTFE	PTFE
5	Body	P235GH 1.0345 S355J2 1.0577 P355N 1.0562	X5CrNi18-10 1.4301
6	Counter-flanges	P250GH 1.0460	X6CrNiTi18-10 1.4541

* depending on the refrigerant used

55 RVZ FL HT

FL: Flanged ends, **HT:** Temperature up to +200°C
RVZ steel check valve - with damping for natural gases and liquids (e.g. NH3, CO2) and non-corrosive media according to EN 378-1
wafer type, without counter-flanges
Optional: LKL - linear ball bearing from DN 65-350

DN 15 - 150

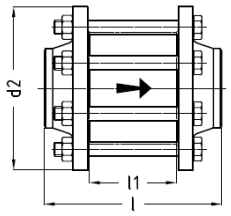

DN200 - DN400

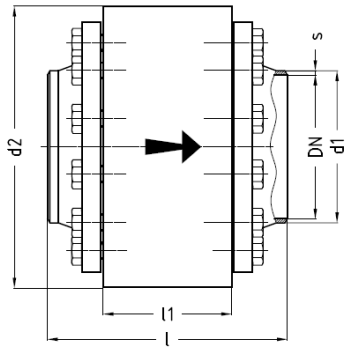

- DN 20-150 wafer type, counter-flanges, screws and nuts are not included
- DN 200-400 wafer type, counter-flanges, screws and nuts are not included
- DN 40-150 flow vertically downwards is a special design.

DN / INCH	PN	-10	+50	+200	TS [°C]
DN 20...200	PN25	25	25	25	PS [bar]
3/4"...8"	PN40	40	40	40	PS [bar]
	PN63	63	63	63	PS [bar]
DN 250...400	PN25	25	25	25	PS [bar]
10"...16"	PN40	40	40	40	PS [bar]

Nominal size:		Welding ends:					Counter-flanges:								
		ISO Series 1			ANSI Sched 40		PN25 DIN 2634 EN1092-1		PN40 DIN 2635 EN1092-1		PN63 DIN 2636 EN1092-1		ANSI 300 RF		
DN	INCH	d1	s1)	s2)	d1	s	l	d2	l	d2	l	d2	l	d2	l1
20	3/4"	26.9	2.3	2.6	26.7	2.9	138	105	138	105	154	130	174	115	58
25	1"	33.7	2.6	2.6	33.4	3.4	143	115	143	115	179	140	191	125	63
32	1 1/4"	42.4	2.6	2.9	42.2	3.6	147	140	147	140	183	155	199	135	63
40	1 1/2"	48.3	2.6	2.9	48.3	3.7	165	150	165	150	199	170	217	155	75
50	2"	60.3	2.9	2.9	60.3	3.9	186	165	186	165	214	180	234	165	90

Nominal size:		Welding ends:					Counter-flanges:								
65	2 1/2“	76.1	2.9	3.2	73.0	5.2	194	185	194	185	226	205	248	190	90
80	3“	88.9	3.2	3.6	88.9	5.5	226	200	226	200	254	215	274	210	110
100	4“	114.3	3.6	4.0	114.3	6.0	255	235	255	235	281	250	301	255	125
125	5“	139.7	4.0	4.5	141.3	6.6	266	270	266	270	306	295	332	280	130
150	6“	168.3	4.5	5.6	168.3	7.1	280	300	280	300	320	345	332	320	130
200	8“	219.1	6.3	7.1	219.1	8.2	345	405	361	405	405	415	413	405	185
250	10“	273.0	7.1		273.0	9.3	406	457	440	457			470	457	230
300	12“	323.9	8.0		323.8	10.3	459	508	505	508			541	508	275
350	14“	355.6	8.0		355.6	11.1	540	610	590	610			630	610	340
400	16“	406.4	8.8		406.4	12.7	585	711	635	711			661	711	365

Table 50: Dimensions

1) PN25 / PN40 2) PN63, DIN/EN-flange facings as standard: facing Form C (DIN 2526)/Type B (EN 1092-1)

56 RVZ FL NIRO HT

FL: Flanged ends, **HT:** Temperature up to +200°C

DN 15 – 150

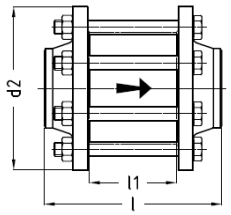

DN200 – DN400

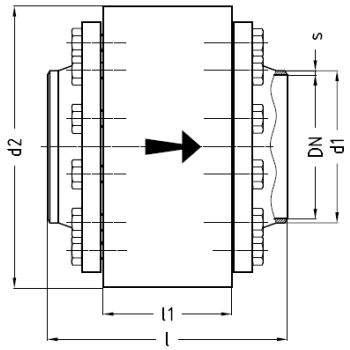

RVZ stainless steel check valve - with damping for natural gases and liquids (e.g. NH3, CO2) and non-corrosive media according to EN 378-1
wafer type, without counter-flanges
Optional: LKL - linear ball bearing from DN 65-350

- DN 20-150 wafer type, counter-flanges, screws and nuts are not included
- DN 200-400 wafer type, counter-flanges, screws and nuts are not included
- DN 40-150 flow vertically downwards is a special design.

Pressure / temperature operating limits:
PS: Max. permissible operating pressure in bar
TS: Permissible operating temperature in °C associated with the permissible operating pressures (PS)
PN: Nominal pressure rating

DN / INCH	PN	-10	+50	+200	TS [°C]
DN 20...200 3/4"...8"	PN25	25	25	25	PS [bar]
	PN40	40	40	40	PS [bar]
	PN63	63	63	63	PS [bar]
DN 250...400 10"...16"	PN25	25	25	25	PS [bar]
	PN40	40	40	40	PS [bar]

Nominal size:		Welding ends:					Counter-flanges:								
		ISO Series 1			ANSI Sched 40		PN25 DIN 2634 EN1092-1		PN40 DIN 2635 EN1092-1		PN63 DIN 2636 EN1092-1		ANSI 300 RF		
DN	INCH	d1	s1)	s2)	d1	s	l	d2	l	d2	l	d2	l	d2	l1
20	3/4"	26.9	2.3	2.6	26.7	2.9	138	105	138	105	154	130	174	115	58
25	1"	33.7	2.6	2.6	33.4	3.4	143	115	143	115	179	140	191	125	63

Nominal size:		Welding ends:					Counter-flanges:								
32	1 1/4“	42.4	2.6	2.9	42.2	3.6	147	140	147	140	183	155	199	135	63
40	1 1/2“	48.3	2.6	2.9	48.3	3.7	165	150	165	150	199	170	217	155	75
50	2“	60.3	2.9	2.9	60.3	3.9	186	165	186	165	214	180	234	165	90
65	2 1/2“	76.1	2.9	3.2	73.0	5.2	194	185	194	185	226	205	248	190	90
80	3“	88.9	3.2	3.6	88.9	5.5	226	200	226	200	254	215	274	210	110
100	4“	114.3	3.6	4.0	114.3	6.0	255	235	255	235	281	250	301	255	125
125	5“	139.7	4.0	4.5	141.3	6.6	266	270	266	270	306	295	332	280	130
150	6“	168.3	4.5	5.6	168.3	7.1	280	300	280	300	320	345	332	320	130
200	8“	219.1	6.3	7.1	219.1	8.2	345	405	361	405	405	415	413	405	185
250	10“	273.0	7.1		273.0	9.3	406	457	440	457			470	457	230
300	12“	323.9	8.0		323.8	10.3	459	508	505	508			541	508	275
350	14“	355.6	8.0		355.6	11.1	540	610	590	610			630	610	340
400	16“	406.4	8.8		406.4	12.7	585	711	635	711			661	711	365

Table 51: Dimensions

1) PN25 / PN40 2) PN63, DIN/EN-flange facings as standard: facing Form C (DIN 2526)/Type B (EN 1092-1)

57 RVZ materials

Designation and materials

RVZ HGA HT - check valve with hot gas connection

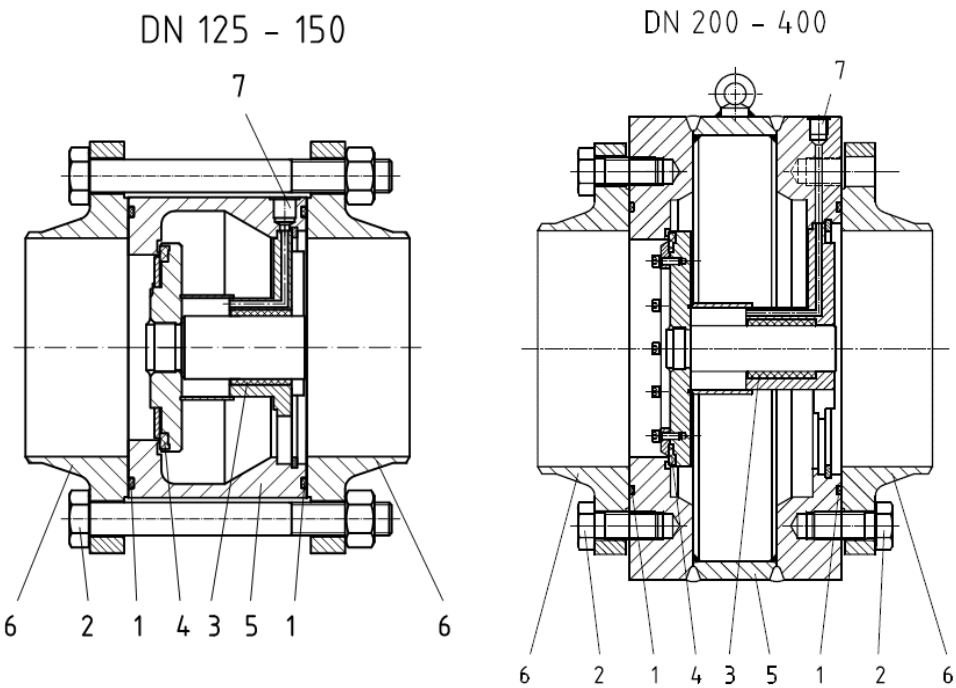

	Part	Material for steel valves	Material for stainless steel valves
1	Body gasket	CR, NBR, HNBR, EPDM, FPM*	CR, NBR, HNBR, EPDM, FPM*
2	Body screw	8.8	A2-70
3	Linear ball bearing	PA, rolling bearing steel	PA, rolling bearing steel
4	Flat sealing ring for valve disc	PTFE	PTFE
5	Body	P235GH 1.0345 S355J2 1.0577 P355N 1.0562	X5CrNi18-10 1.4301
6	Counter-flanges	P250GH 1.0460	X6CrNiTi18-10 1.4541
7	Hot gas connection		

* depending on the refrigerant used

58 RVZ HGA FL HT

HGA: Hot gas connection**FL:** Flanged ends, **HT:** Temperature up to +200°C
RVZ steel check valve - with hot gas connection for natural gases and liquids (e.g. NH3, CO2) and non-corrosive media according to EN 378-1
wafer type, without counter-flanges

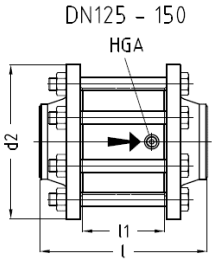

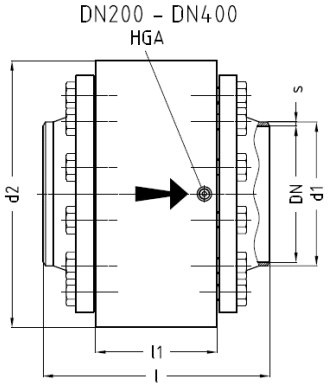

- DN 125-150 wafer type, counter-flanges, screws and nuts are not included
- DN 200-400 wafer type, counter-flanges, screws and nuts are not included

Pressure / temperature operating limits:
PS: Max. permissible operating pressure in bar
TS: Permissible operating temperature in °C associated with the permissible operating pressures (PS)
PN: Nominal pressure rating

DN / INCH	PN	-10	+50	+200	TS [°C]
DN 125...200 5”...8”	PN25	25	25	25	PS [bar]
	PN40	40	40	40	PS [bar]
	PN63	63	63	63	PS [bar]
DN 250...400 10”...16”	PN25	25	25	25	PS [bar]
	PN40	40	40	40	PS [bar]

Nominal size:		Welding ends:					Counter-flanges:								
		ISO Series 1			ANSI Sched 40		PN25 DIN 2634 EN1092-1		PN40 DIN 2635 EN1092-1		PN63 DIN 2636 EN1092-1		ANSI 300 RF		
DN	INCH	d1	s1)	s2)	d1	s	l	d2	l	d2	l	d2	l	d2	l1
125	5”	139.7	4.0	4.5	141.3	6.6	266	270	266	270	306	295	332	280	130
150	6”	168.3	4.5	5.6	168.3	7.1	280	300	280	300	320	345	332	320	130
200	8”	219.1	6.3	7.1	219.1	8.2	345	405	361	405	405	415	413	405	185
250	10”	273.0	7.1		273.0	9.3	406	457	440	457			470	457	230

Nominal size:		Welding ends:					Counter-flanges:								
300	12″	323.9	8.0		323.8	10.3	459	508	505	508			541	508	275
350	14″	355.6	8.0		355.6	11.1	540	610	590	610			630	610	340
400	16″	406.4	8.8		406.4	12.7	585	711	635	711			661	711	365

Table 52: Dimensions

1) PN25 / PN40 2) PN63, DIN/EN-flange facings as standard: facing Form C (DIN 2526)/Type B (EN 1092-1)

59 RVZ HGA FL NIRO HT

HGA: Hot gas connection**FL:** Flanged ends, **HT:** Temperature up to +200°C
RVZ stainless steel check valve - with hot gas connection for natural gases and liquids (e.g. NH3, CO2) and non-corrosive media according to EN 378-1
wafer type, without counter-flanges

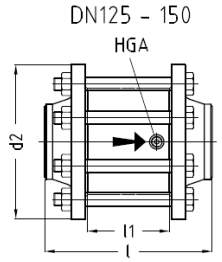

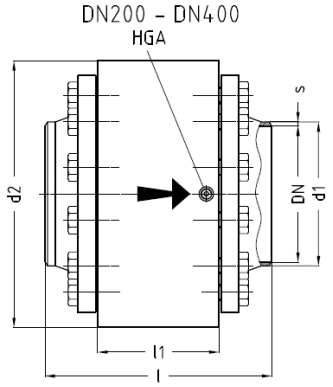

- DN 125-150 wafer type, counter-flanges, screws and nuts are not included
- DN 200-400 wafer type, counter-flanges, screws and nuts are not included

Pressure / temperature operating limits:
PS: Max. permissible operating pressure in bar
TS: Permissible operating temperature in °C associated with the permissible operating pressures (PS)
PN: Nominal pressure rating

DN / INCH	PN	-10	+50	+200	TS [°C]
DN 125...200 5”...8”	PN25	25	25	25	PS [bar]
	PN40	40	40	40	PS [bar]
	PN63	63	63	63	PS [bar]
DN 250...400 10”...16”	PN25	25	25	25	PS [bar]
	PN40	40	40	40	PS [bar]

Nominal size:		Welding ends:					Counter-flanges:								
		ISO Series 1			ANSI Sched 40		PN25 DIN 2634 EN1092-1		PN40 DIN 2635 EN1092-1		PN63 DIN 2636 EN1092-1		ANSI 300 RF		
DN	INCH	d1	s1)	s2)	d1	s	l	d2	l	d2	l	d2	l	d2	l1
125	5”	139.7	4.0	4.5	141.3	6.6	266	270	266	270	306	295	332	280	130
150	6”	168.3	4.5	5.6	168.3	7.1	280	300	280	300	320	345	332	320	130
200	8”	219.1	6.3	7.1	219.1	8.2	345	405	361	405	405	415	413	405	185
250	10”	273.0	7.1		273.0	9.3	406	457	440	457			470	457	230

Nominal size:		Welding ends:					Counter-flanges:								
300	12″	323.9	8.0		323.8	10.3	459	508	505	508			541	508	275
350	14″	355.6	8.0		355.6	11.1	540	610	590	610			630	610	340
400	16″	406.4	8.8		406.4	12.7	585	711	635	711			661	711	365

Table 53: Dimensions

1) PN25 / PN40 2) PN63, DIN/EN-flange facings as standard: facing Form C (DIN 2526)/Type B (EN 1092-1)

60 Appendix

61 Damping in check valves

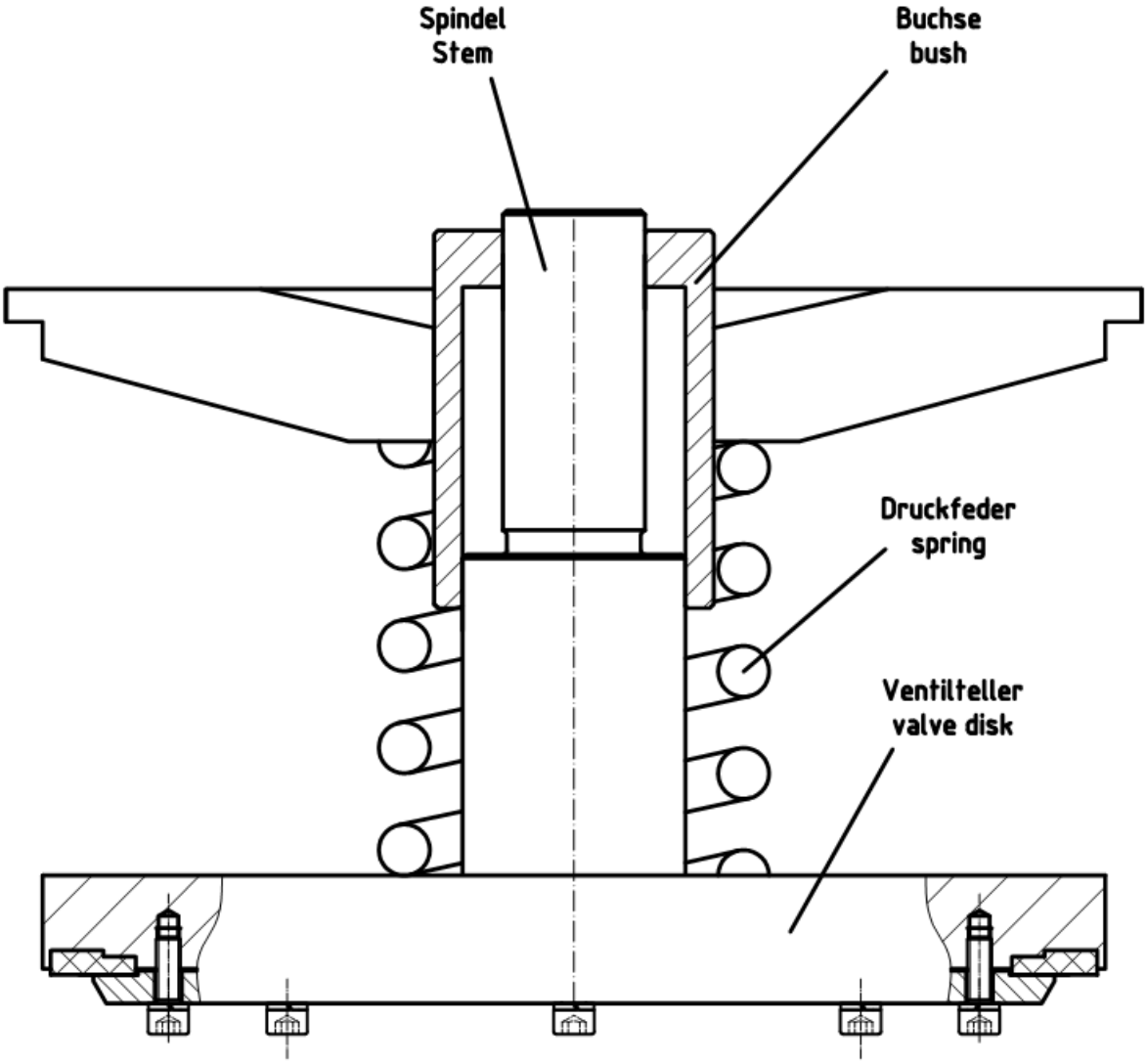

GEA AWP – check valves are available with out without damping. The standard design is delivered with a damping system.
The damping system reduces the vibration tendency of the valve. Therefore, valves with a damping system can be used at a lower part load than comparable valves without a damping system.
The tolerance of the fit between the bush and the stem is selected such that rapid slamming of the valve is not possible, as refrigerant gas can only flow slowly into the increasing space between the stem and the bush during the closing process of the valve.

62 Valve stem sealing system

The valve stem sealing system is maintenance-free.
The sealing system consists of the following components:

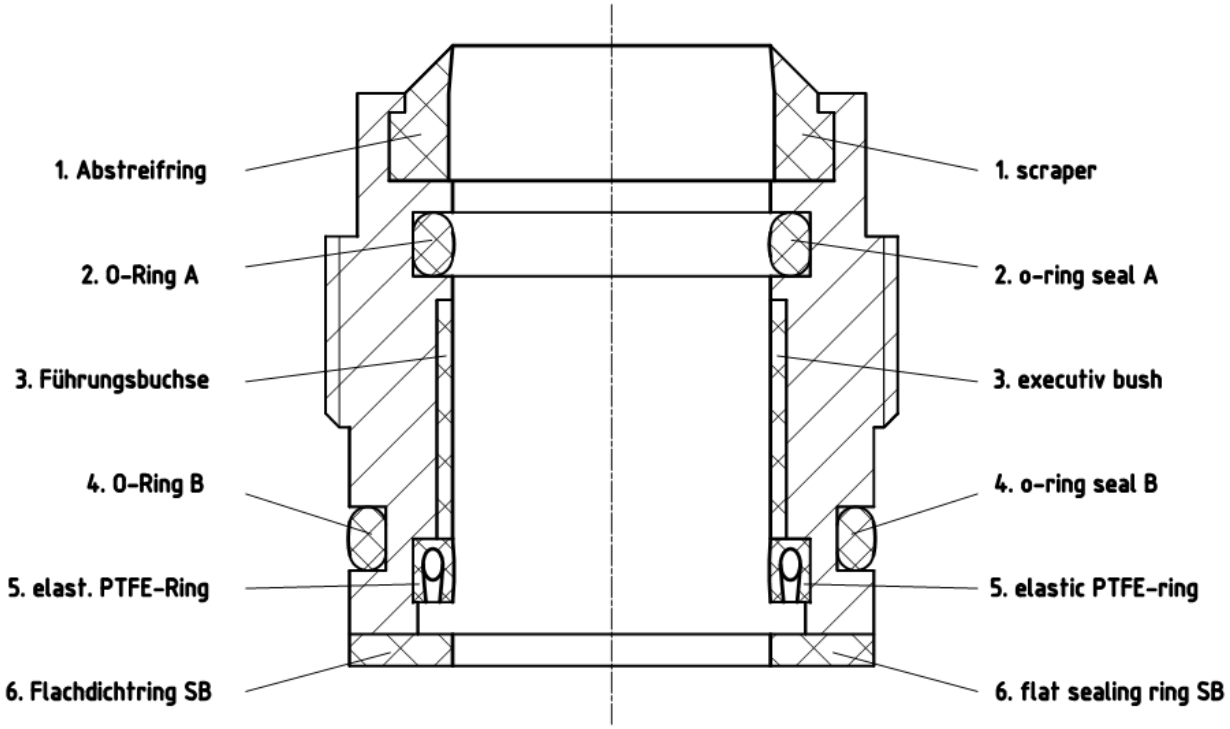

1. Wiper ring

   The wiper ring prevents the ingress of dirt and water from the outside.
2. O-ring A

   O-ring A makes the valve vacuum-tight. (Valve operation in the vacuum range at low temperatures)
3. Guide bush

   The guide bush prevents damage to the stem.
4. O-ring B

   O-ring B seals the outer part of the sealing system in addition to the flat sealing ring SB.
5. Resilient PTFE ring

   The resilient PTFE ring is the primary seal of the sealing system. It consists of a high-performance PTFE compound with a wound stainless steel spring. This seal seals the valve to the atmosphere.
6. Flat sealing ring SB

   The flat sealing ring SB seals the outer part of the sealing system.

Note: GEA AWP valves have a back seal. Therefore, the removal and replacement of the sealing system is possible during operation of the plant. Please observe the instructions in our operating regulations regarding this.

63 Insulation thicknesses

AVR - shut-off valves
HRAR - control valves

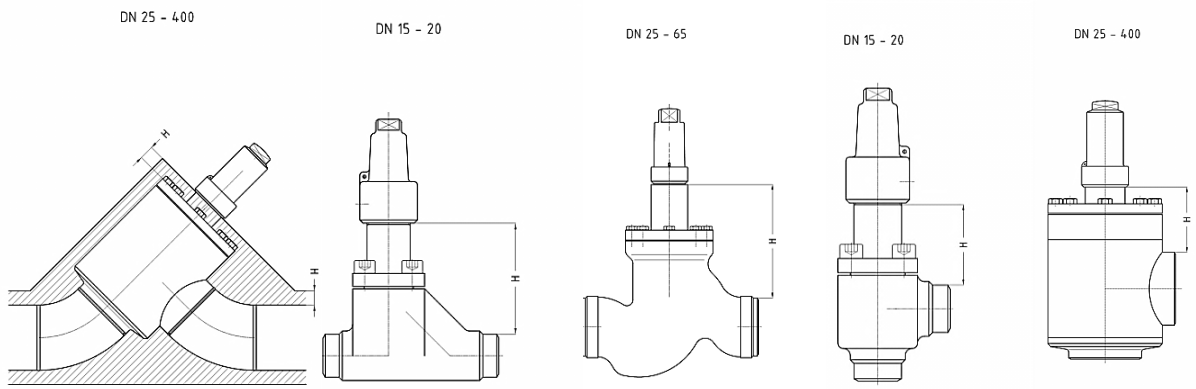

Nominal size		Straight-way valves				Nominal size		Angle valves	
		Angle-seat		Straight-seat				Angle type	
		AVR D	AVR D DV	AVR D	AVR D DV			AVR E	AVR E DV
		HRAR D	HRAR D DV	HRAR D	HRAR D DV			HRAR E	HRAR E DV
DN	INCH	H	H	H	H	DN	INCH	H	H
15	1/2"			52	84	15	1/2"	34	67
20	3/4"			69	106	20	3/4"	43	81
25	1"	21	81	84	144	25	1"	62	122
32	1 1/4"	21	81	81	141	32	1 1/4"	58	118
40	1 1/2"	14	74	88	148	40	1 1/2"	59	117
50	2"	14	74	82	142	50	2"	53	111
65	2 1/2"	9	79	102	170	65	2 1/2"	52	120
80	3"	21	80	144	203	80	3"	99	158
100	4"	9	90	144	225	100	4"	82	163
125	5"	29	129			125	5"	123	222
150	6"	5	105			150	6"	103	203
200	8"	11	102			200	8"	146	237
250	10"	100	100			250	10"	230	230
300	12"	107	107			300	12"	251	251
350	14"	107	107			350	14"	270	270
400	16"	112	112			400	16"	309	309

AVR / HRAR D = standard valves, AVR / HRAR D DV = valves with bonnet extension

64 HR / K

HR

Handwheel / Cap

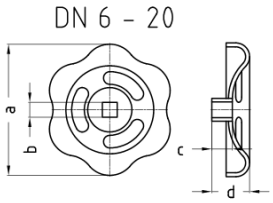

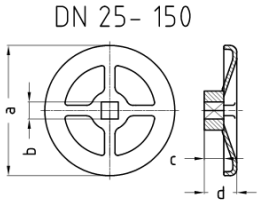

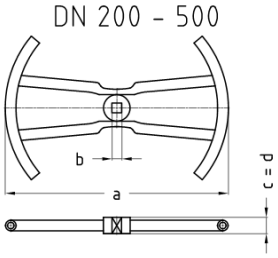

for type: HRS AVR AVB HRAR HRAB RVA RVAK				
	Diameter	Hub square	Hub height	Height
DN	a	b	c	d
6-20	60	6	9	15
25-32	120	11	14	31.0
40-65	140	12	16	32.5
80-100	180	14	22	42.0
125	300	22	28	55
150	400	22	28	60
200-500	630	28	46	46

Table 54: Dimensions DN 6 - 500

K

Cap

DN 6 - 500

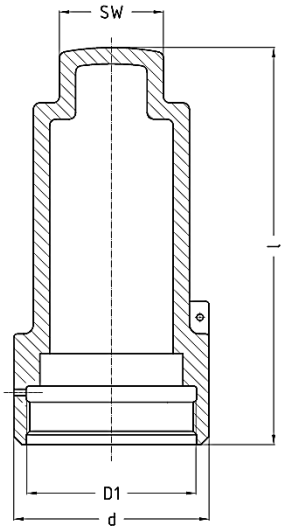

for type: AVR AVB HRAR HRAB RVA RVAK				
	Height	Diameter	Thread	Wrench size
DN	l	d	D1	SW
6-20	65	36	M27x2	19
25-32	99	45	M36x2	24
40-65	122	60	M52x3	32
80-100	148	72	M60x3	41
125-150	165	90	M76x3	50
200-350	260	100	M80x3	60
400	319	100	M80x3	90
500	325	100	M80x3	90

Table 55: Dimensions DN 6 - 500

65 Comparison of European / American materials

GEA AWP valves contain individual parts in different materials. The following table contains all materials that GEA AWP uses for pressure-retaining parts and lists the equivalent American materials.

European material			American equivalent material	
Material number	Short name	Standard	Material standard	Grade
Valves made of carbon steel				
1.0345	P235GH, TC1 +N	DIN EN 10216-2	ASME SA-106	A + B
1.0038	S235JR +N	DIN EN 10025-2	ASME SA-570	36
1.0425	P265GH	DIN EN 10028-2	ASME SA-516	60
1.0577	S355J2 +N	DIN EN 10025-2	ASME SA-516	65
1.0562	P355N	DIN EN 10028-3		
1.0460	C22.8	VdTÜV 350/3	ASME SA-105	-
Valves made of low-temperature steel				
1.0451	P215NL +N	DIN EN 10216-4	ASME SA-333	6
1.0452	P255QL +QT	DIN EN 10216-4		
1.0566	P355NL1 +N	DIN EN 10028-3 DIN 17103 VdTÜV 354/3	ASME SA-662 ASME SA-420 ASME SA-350	B WPL6 LF2
1.0488	TStE 285	DIN 17103 VdTÜV 352/3	ASME SA-662 ASME SA-350	A LF2
Valves made of stainless steel				
1.4301	X5CrNi18-10	DIN EN 10216-5 DIN EN 10028-7 DIN EN 10222-5 DIN EN 1092-1	ASME SA-312 ASME SA-240 ASME SA-182	TP304 304 F304

Straight-way valves in non-standard design (e.g. deviating materials, third-party inspection) are only available in angle-seat form.

66 Coding of connections for small and service valves

GEA AWP valves can be manufactured with a variety of connection variants:

DN	Thread	Code	Welding ends		Dimensions	Code
DN8	M12x1.5 RA6	AL	DN6	R1	Ø10.2x1.6	C0
DN8	M12x1.5-taper	AY		ANSI 40	Ø1/8"x1.7	C1
DN8	M14x1.5 RA8	A4		ANSI 80	Ø1/8"x2.4	C2
DN8	M16x1.5 RA8	A5				
DN8	M16x1.5 RA10	A6	DN8	R1	Ø13.5x1.8	D0
DN8	M16x1.5-i	AZ		ANSI 40	Ø1/4"x2.2	D1
DN8	M16x1.5-taper	AC		ANSI 80	Ø1/4"x3.0	D2
DN8	M18x1.5 RA10	A7		12x2	Ø12x2.0	D3
DN8	M18x1.5 RA12	A8		12x3	Ø12x3.0	D4
DN8	M20x1.5 RA12	A9		R1 ext. L2=130 Niro	Ø13.5x1.8	D5
DN8	M22x1.5 RA14	AA		R1 ext. L2=130 C-St.	Ø13.5x1.8	D6
DN8	M22x1.5 RA15	AB				
DN8	M22x1.5	A0	DN10	R1	Ø17.2x1.8	E0
DN8	M22x1.5-taper	AD		ANSI 40	Ø3/8"x2.3	E1
DN20	M26x1.5 RA18	AS		ANSI 80	Ø3/8"x3.2	E2
DN20	M30x2 RA22	AT		R2	Ø15x2.5	E3
DN8	G1/4"	AF		18x3	Ø18x3.0	E4
DN8	G1/4"-taper	AG		R1 ext. L2=130 Niro	Ø17.2x1.8	E5
DN8	G1/4"-i	AH		R1 ext. L2=130 C-St.	Ø17.2x1.8	E6
DN8	G3/8"	AK		16x4 ext.L2=130 NIRO	Ø16x4.0	E7
DN8	G3/8"-i	AM		17,2x2	Ø17.2x2.0	E8
DN8	G3/8" RA10	AJ		R1 ext. L2=120 C-St.	Ø17.2x1.8	E9
DN8	G1/2"	A1		R1 ext. L2=140 Niro	Ø17.2x1.8	EA
DN8	G1/2"-LH	A2		R1 ext. L2=140 C-St.	Ø17.2x1.8	EB
DN8	G1/2" RA12	AN		R1 ext. L2=60 Niro	Ø17.2x1.8	EC
DN8	G1/2"-i	AU		R1 ext. L2=60 C-St.	Ø17.2x1.8	ED
DN8	G1/2" UM *)	AV		18x4 ext.L2=140 Niro	Ø18x4.0	EE

DN	Thread	Code	Welding ends		Dimensions	Code
DN8	G1/2″ **)	AW		18x4 ext.L2=140C-St	Ø18x4.0	EF
DN8	G1/2″-taper	AX		18x4 ext.L2=60 Niro	Ø18x4.0	EG
DN20	G3/4″	AE		18x4 ext.L2=60 C-St.	Ø18x4.0	EH
DN20	G3/4″ RA18	AP				
DN8	1/4″NPT-male	A3	DN15	R1	Ø21.3x2.0	F0
DN8	1/4″NPT-female	AR		ANSI 40	Ø1/2″x2.8	F1
DN8	3/8″NPT-male	AI		ANSI 80	Ø1/2″x3.7	F2
DN8	3/8″NPT-female	B2		R2	Ø20x2.5	F3
DN8	1/2″NPT-male	B0		R1 ext. L2=130 Niro	Ø21.3x2.0	F5
DN8	1/2″NPT-female	B1		R1 ext. L2=130 C-St.	Ø21.3x2.0	F6
DN20	3/4''NPT-male	B3		R1 ext. L2=180 NIRO	Ø21.3x2.0	F7
DN8	M10-a	B4		ANSI 80 L2=130 C-St	Ø21.3x3.7	F8
DN20	G1″	B6	*) rotatable, welded to body			
DN8	G3/8'' BSPT-male	B7				
DN8	G3/8'' BSPT-female	B8	**) for one-piece blind nut			
DN8	3/8-18 NPTF-male	B9				
DN8	R3/8''-taper	BA				

i = female thread, a = male thread

These connections can be equipped with accessories.

	Accessories	Short designation	Code
UM+ST	Union nut with welding nipple	UM+ST	1
BM	Blind nut	BM	2
DM	Double nut left/right	DM	3
UM+SKB	Union nut with weld ball nipple	UM+SKB	4
UM+SR	Union nut with cutting ring	UM+SR	5
UM+SLT	Union nut with hose nipple	UM+SLT	6
DM+adapter	Double nut with adapter G1/2"-a/G1/4"-i	DM+adapter	7
UM+KKR	Union nut with clamping ring	UM+KKR	9

Latest revision: 05.02.2026. Subject to modifications.

The most recent version of this document is available on awpvalves.com/downloads/

67 Accessories for AVR, HRAR, RV, RVA, RVAK, SS, UVA

- UM+ST Union nut with welding nipple and gasket
- BM Blind nut with gasket
- DM Double nut right-hand/left-hand with gasket
- UM+SLT Union nut with hose nipple and gasket
- UM+SKB Union nut with weld ball nipple
- UM+SR Union nut with cutting ring

Type	AWP code	Description
UM+ST G3/8"	00060F07A5A0AK01	Union nut G3/8", welding nipple 10.2x1.6, gasket 10x13.5x1.5-Al
UM+ST G1/2"	00060F07A5A0A101	Union nut G1/2", welding nipple 13.5x1.8, gasket 13x18x1.5-Al
UM+ST G3/4"	00060F07A5A0AE01	Union nut G3/4", welding nipple 17.2x2.0, gasket 17x22x1.5-Al
UM+ST G1"	00060F07A5A0B601	Union nut G1" + welding nipple 21.3x2.0 + gasket 22x27x1.5-Al
BM 8 (G1/2")	00060F07A5A0A102	Blind nut G1/2", gasket 13x18x1.5-Al G1/2"
BM 10 (G3/4")	00060F07A5A0AE02	Blind nut G3/4", gasket 17x22x1.5-Al G3/4"
DM G1/2"-G1/2"L	00060F07A5A0A203	Left-right nut G1/2", gasket 13x18x1.5-Al
UM+SLT	00060F07A5A0A106	One-piece hose nipple G1/2" + gasket 13x18x1.5-Al
UM+SKB 6 RA6	00060F07A5A0AL04	Union nut M12x1.5 RA6, weld ball nipple SKA 6x1.5
UM+SKB 8 RA10	00060F07A5A0A604	Union nut M16x1.5 RA10, weld ball nipple SKA 10x1.5
UM+BM 8 RA10	00060F07A5A0A602	Union nut with blind plug M16x1.5 RA10
UM+SKB 8 RA12	00060F07A5A0A804	Union nut M18x1.5 RA12, weld ball nipple SKA 12x2.0
UM+BM 8 RA12	00060F07A5A0A802	Union nut with blind plug M18x1.5 RA12 Cap nut M18x1,5 RA12 with blind plug
UM+SKB G1/2" RA12	00060F07A5A0AN04	Union nut G1/2" RA12, weld ball nipple SKA 12x2 RA12 Cap nut G1/2" RA12, 12x2
UM+BM G1/2" RA12	00060F07A5A0AN02	Union nut with blind plug G1/2" RA12
UM+SR 6 L6	00060F07A5A0AL05	Union nut M12x1.5 RA6, cutting ring L6
UM+SR 8 L10	00060F07A5A0A605	Union nut M16x1.5 RA10, cutting ring L10
UM+SR 8 L12	00060F07A5A0A805	Union nut M18x1.5 RA12, cutting ring L12
UM+SR G1/2" RA12	00060F07A5A0AN05	Union nut G1/2" RA12, cutting ring L12

68 Welding neck flanges - DIN 2634/2635

- DIN-FL
- DIN-FL N
- DIN-FL F
- DIN-FL C
- DIN-FL D
- FL - flange
- Form N - groove DIN 2512
- Form F - tongue DIN 2512
- Form C - smooth flange facing (Rz 160) DIN 2526
- Form D - smooth flange facing (Rz 40) DIN 2526

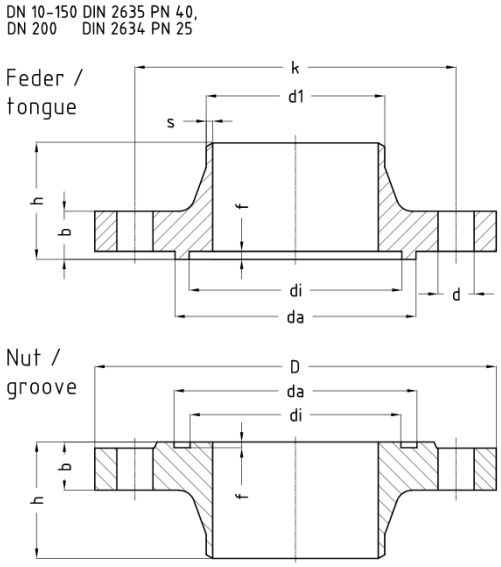

DIN2634 PN25 DN10-150 / DIN 2635 PN40 DN10-400																				
	Welding ends s									Flange facing design						Screws DIN 931			Sealing ring DIN 2691	
	Series 1		Series 2							Groove			Tongue							
DN	d1	s	d1	s	b	k	h	d	D	di	da	f	di	da	f	Quant-ity	Thread	Lengt h	di	da
10	17.2	1.8	15.0	2.5	16	60	35	14	90	23	35	2.5	24	34	4.0	4	M 12	45	24	34
15	21.3	2.0	20.0	2.5	16	65	38	14	95	28	40	2.5	29	39	4.0	4	M 12	45	29	39
20	26.9	2.3	25.0	2.5	18	75	40	14	105	35	51	2.5	36	50	4.0	4	M 12	50	36	50
25	33.7	2.6	32.0	3.0	18	85	40	14	115	42	58	2.5	43	57	4.0	4	M 12	50	43	57

Latest revision: 05.02.2026. Subject to modifications.
The most recent version of this document is available on awpvalves.com/downloads/

DIN2634 PN25 DN10-150 / DIN 2635 PN40 DN10-400																				
32	42.4	2.6	38.0	3.0	18	100	42	18	140	50	66	2.5	51	65	4.0	4	M 16	55	51	65
40	48.3	2.6	45.0	3.0	18	110	45	18	150	60	76	2.5	61	75	4.0	4	M 16	55	61	75
50	60.3	2.9	57.0	3.2	20	125	48	18	165	72	88	2.5	73	87	4.0	4	M 16	60	73	87
65	76.1	2.9	76.1	3.6	22	145	52	18	185	94	110	2.5	95	109	4.0	8	M 16	60	95	109
80	88.9	3.2	88.9	4.0	24	160	58	18	200	105	121	2.5	106	120	4.0	8	M 16	65	106	120
100	114.3	3.6	108.0	4.0	24	190	65	22	235	128	150	3.0	129	149	4.5	8	M 20	70	129	149
125	139.7	4.0	133.0	4.0	26	220	68	26	270	154	176	3.0	155	175	4.5	8	M 24	80	155	175
150	168.3	4.5	159.0	4.5	28	250	75	26	300	182	204	3.0	183	203	4.5	8	M 24	80	183	203
200	219.1	6.3			34	320	88	30	375	238	260	3.0	239	259	4.5	12	M 27	100	239	259
250	273.0	7.1			38	385	105	33	450	291	313	3.0	292	312	4.5	12	M 30	110	292	312
300	323.9	8.0			42	450	115	33	515	342	364	3.0	343	363	4.5	16	M 30	120	343	363
350	355.6	8.8			46	510	125	36	580	394	422	3.5	395	421	5.0	16	M 33	130	395	421
400	406.4	11.0			50	585	135	39	660	446	474	3.5	447	473	5.0	16	M 36	140	447	473

Table 56: Installation lengths

69 Welding neck flanges - DIN 2634/2636/2637

- DIN-FL
- DIN-FL N
- DIN-FL F
- DIN-FL C
- DIN-FL D
- FL - flange
- Form N - groove DIN 2512
- Form F - tongue DIN 2512
- Form C - smooth flange facing (Rz 160) DIN 2526
- Form D - smooth flange facing (Rz 40) DIN 2526

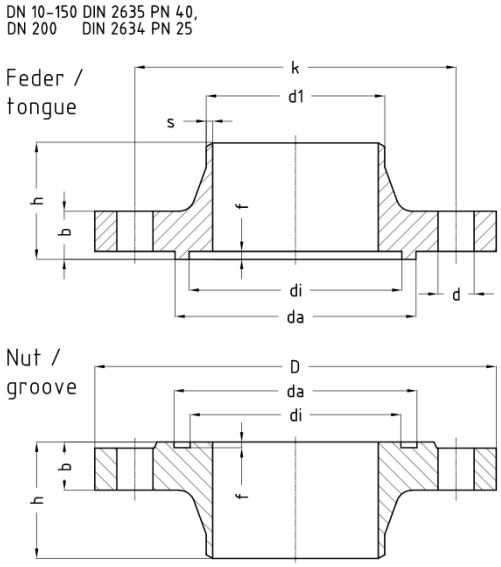

DIN 2634 PN25 DN200-500																		
	Welding ends							Flange facing design						Screws DIN 931			Sealing ring DIN 2691	
	Series 1							Groove			Tongue							
DN	d1	s	b	k	h	d	D	di	da	f	di	da	f	Quant-ity	Thread	Length	di	da
200	219.1	6.3	30	310	80	26	360	238	260	3.0	239	259	4.5	12	M 24	90	239	259
250	273.0	7.1	32	370	88	30	425	291	313	3.0	292	312	4.5	12	M 27	90	292	312
300	323.9	8.0	34	430	92	30	485	342	364	3.0	343	363	4.5	16	M 27	100	343	363
350	355.6	8.0	38	490	100	33	555	394	422	3.5	395	421	5.0	16	M 30	110	395	421

Latest revision: 05.02.2026. Subject to modifications.
The most recent version of this document is available on awpvalves.com/downloads/

DIN 2634 PN25 DN200-500																		
400	406.4	8.8	40	550	110	36	620	446	474	3.5	447	473	5.0	16	M 33	120	447	473
500	508.0	10.0	44	660	125	36	730	548	576	3.5	549	575	5.0	20	M 33	130	549	575
DIN2636 PN63 DN10-40 / DIN 2637 PN100 DN10-40																		
DN	d1	s	b	k	h	d	D	di	da	f	di	da	f	Quant-ity	Thread	Length	di	Da
10	17.2	2.0	20	70	45	14	100	23	35	2.5	24	34	4.0	4	M 12	55	24	34
15	21.3	2.0	20	75	45	14	105	28	40	2.5	29	39	4.0	4	M 12	55	29	39
20	26.9	2.6	22	90	48	18	130	35	51	2.5	36	50	4.0	4	M 16	60	36	50
25	33.7	2.6	24	100	58	18	140	42	58	2.5	43	57	4.0	4	M 16	65	43	57
32	42.4	2.9	24	110	60	22	155	50	66	2.5	51	65	4.0	4	M 20	70	51	65
40	48.3	2.9	26	125	62	22	170	60	76	2.5	61	75	4.0	4	M 20	70	61	75
DIN 2636 PN63 DN50-125																		
DN	d1	S	b	k	h	d	D	di	da	f	di	da	f	Quant-ity	Thread	Length	di	da
50	60.3	2.9	26	135	62	22	180	72	88	2.5	73	87	4.0	4	M 20	75	73	87
65	76.1	3.2	26	160	68	22	205	94	110	2.5	95	109	4.0	8	M 20	75	95	109
80	88.9	3.6	28	170	72	22	215	105	121	2.5	106	120	4.0	8	M 20	75	106	120
100	114.3	4.0	30	200	78	26	250	128	150	3.0	129	149	4.5	8	M 24	90	129	149
125	139.7	4.5	34	240	88	30	295	154	176	3.0	155	175	4.5	8	M 27	100	155	175

Table 57: Installation lengths

70 Welding neck flanges - DIN EN 1092-1

- DIN EN-FL
- DIN EN-FL D
- DIN EN-FL C
- DIN EN-FL B1
- DIN EN-FL B2
- FL - flange
- Form D - groove, DIN EN 1092-1
- Form C - tongue, DIN EN 1092-1
- Form B1 - raised face (Rz 50) DIN EN 1092-1
- Form B2 - raised face (Rz 12.5) DIN EN 1092-1

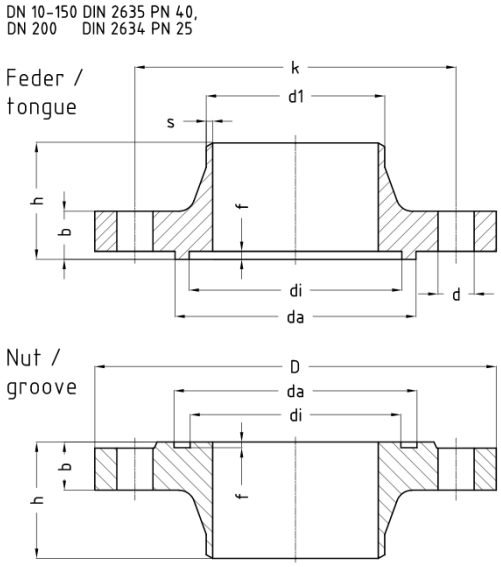

DIN EN 1092-1 PN25 DN10-150 / PN40 DN10-400																				
	Welding ends									Flange facing design						Screws			Sealing ring	
	Series 1		Series 2							Groove			Tongue			DIN 931			DIN 2691	
DN	d1	s	d1	s	b	k	h	d	D	di	da	f	di	da	f	Quant-ity	Thread	Lengt h	di	da
10	17.2	1.8	15.0	2.5	16	60	35	14	90	23	35	4.0	24	34	4.5	4	M 12	45	24	34
15	21.3	2.0	20.0	2.5	16	65	38	14	95	28	40	4.0	29	39	4.5	4	M 12	45	29	39
20	26.9	2.3	25.0	2.5	18	75	40	14	105	35	51	4.0	36	50	4.5	4	M 12	50	36	50
25	33.7	2.6	32.0	3.0	18	85	40	14	115	42	58	4.0	43	57	4.5	4	M 12	50	43	57

Latest revision: 05.02.2026. Subject to modifications.
The most recent version of this document is available on awpvalves.com/downloads/

DIN EN 1092-1 PN25 DN10-150 / PN40 DN10-400																				
32	42.4	2.6	38.0	3.0	18	100	42	18	140	50	66	4.0	51	65	4.5	4	M 16	55	51	65
40	48.3	2.6	45.0	3.0	18	110	45	18	150	60	76	4.0	61	75	4.5	4	M 16	55	61	75
50	60.3	2.9	57.0	3.2	20	125	48	18	165	72	88	4.0	73	87	4.5	4	M 16	60	73	87
65	76.1	2.9	76.1	3.6	22	145	52	18	185	94	110	4.0	95	109	4.5	8	M 16	60	95	109
80	88.9	3.2	88.9	4.0	24	160	58	18	200	105	121	4.0	106	120	4.5	8	M 16	65	106	120
100	114.3	3.6	108.0	4.0	24	190	65	22	235	128	150	4.5	129	149	5.0	8	M 20	70	129	149
125	139.7	4.0	133.0	4.0	26	220	68	26	270	154	176	4.5	155	175	5.0	8	M 24	80	155	175
150	168.3	4.5	159.0	4.5	28	250	75	26	300	182	204	4.5	183	203	5.0	8	M 24	80	183	203
200	219.1	6.3			34	320	88	30	375	238	260	4.5	239	259	5.0	12	M 27	100	239	259
250	273.0	7.1			38	385	105	33	450	291	313	4.5	292	312	5.0	12	M 30	110	292	312
300	323.9	8.0			42	450	115	33	515	342	364	4.5	343	363	5.0	16	M 30	120	343	363
350	355.6	8.8			46	510	125	36	580	394	422	5.0	395	421	5.5	16	M 33	130	395	421
400	406.4	11.0			50	585	135	39	660	446	474	5.0	447	473	5.5	16	M 36	140	447	473

Table 58: Installation lengths

71 Welding neck flanges - DIN EN 1092-1

- DIN EN-FL
- DIN EN-FL D
- DIN EN-FL C
- DIN EN-FL B1
- DIN EN-FL B2
- FL - flange
- Form D - groove, DIN EN 1092-1
- Form C - tongue, DIN EN 1092-1
- Form B1 - raised face (Rz 50) DIN EN 1092-1
- Form B2 - raised face (Rz 12.5) DIN EN 1092-1

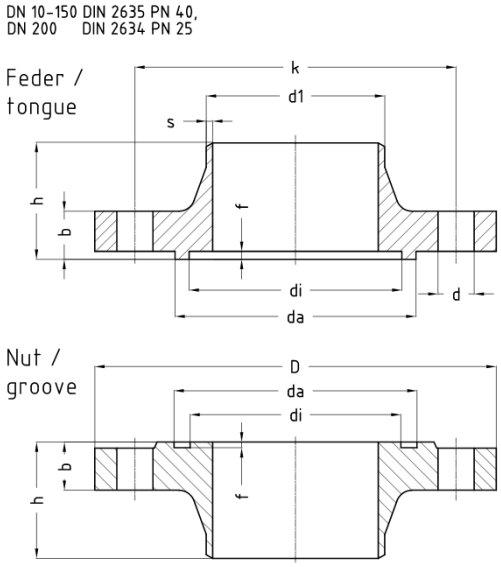

DIN EN 1092-1 PN25 DN200-500																		
	Welding ends							Flange facing design						Screws			Sealing ring	
	Series 1							Groove			Tongue			DIN 931			DIN 2691	
DN	d1	s	b	k	h	d	D	di	da	f	di	da	f	Quantity	Thread	Length	di	da
200	219.1	6.3	30	310	80	26	360	238	260	4.5	239	259	5.0	12	M 24	90	239	259
250	273.0	7.1	32	370	88	30	425	291	313	4.5	292	312	5.0	12	M 27	90	292	312
300	323.9	8.0	34	430	92	30	485	342	364	4.5	343	363	5.0	16	M 27	100	343	363
350	355.6	8.0	38	490	100	33	555	394	422	5.0	395	421	5.5	16	M 30	110	395	421

Latest revision: 05.02.2026. Subject to modifications.
The most recent version of this document is available on awpvalves.com/downloads/

DIN EN 1092-1 PN25 DN200-500																		
400	406.4	8.8	40	550	110	36	620	446	474	5.0	447	473	5.5	16	M 33	120	447	473
500	508.0	10.0	44	660	125	36	730	548	576	5.0	549	575	5.5	20	M 33	130	549	575
DIN EN 1092-1 PN63 DN10-40 / PN100 DN10-40																		
DN	d1	s	b	k	h	d	D	di	da	F	di	da	f	Quantity	Thread	Length	di	Da
10	17.2	2.0	20	70	45	14	100	23	35	4.0	24	34	4.5	4	M 12	55	24	34
15	21.3	2.0	20	75	45	14	105	28	40	4.0	29	39	4.5	4	M 12	55	29	39
20	26.9	2.6	22	90	48	18	130	35	51	4.0	36	50	4.5	4	M 16	60	36	50
25	33.7	2.6	24	100	58	18	140	42	58	4.0	43	57	4.5	4	M 16	65	43	57
32	42.4	2.9	24	110	60	22	155	50	66	4.0	51	65	4.5	4	M 20	70	51	65
40	48.3	2.9	26	125	62	22	170	60	76	4.0	61	75	4.5	4	M 20	70	61	75
DIN EN 1092-1 PN63 DN50-125																		
DN	d1	S	b	k	h	d	D	di	da	f	di	da	F	Quantity	Thread	Length	di	da
50	60.3	2.9	26	135	62	22	180	72	88	4.0	73	87	4.5	4	M 20	75	73	87
65	76.1	3.2	26	160	68	22	205	94	110	4.0	95	109	4.5	8	M 20	75	95	109
80	88.9	3.6	28	170	72	22	215	105	121	4.0	106	120	4.5	8	M 20	75	106	120
100	114.3	4.0	30	200	78	26	250	128	150	4.5	129	149	5.0	8	M 24	90	129	149
125	139.7	4.5	34	240	88	30	295	154	176	4.5	155	175	5.0	8	M 27	100	155	175

Table 59: Installation lengths

72 Welding neck flanges - ANSI B16.5 raised face

- ANSI-FL
- ANSI-FL 150lbs RF
- ANSI-FL 300lbs RF
- FL - flange
- Facing with large and small male / female
- Facing with large and small tongue / groove according to ANSI B16.5

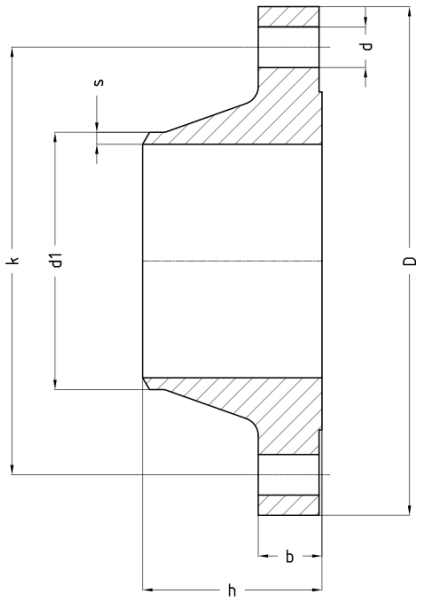

Nominal size		Welding ends acc. to:													
		ANSI		ANSI-FL 150lbs RF / sq. in					Screws DIN 931	ANSI-FL 300lbs RF / sq. in					Screws DIN 931
DN	INCH	d1	s	b	k	h	d	D	Quantity	b	k	h	d	D	Quantity
15	1/2"	21.3	2.8	11.2	60.5	47.8	15.7	88.9	4	14.2	66.5	52.3	15.7	95.2	4
20	3/4"	26.7	2.9	12.7	69.9	52.3	15.7	98.6	4	15.7	82.5	57.1	19.0	117.3	4
25	1"	33.4	3.4	14.2	79.2	55.6	15.7	108.0	4	17.5	88.9	62.0	19.0	123.9	4
32	1 1/4"	42.2	3.6	15.7	88.9	57.2	15.7	117.3	4	19.0	98.5	65.0	19.0	133.3	4
40	1 1/2"	48.3	3.7	17.5	98.6	62.0	15.7	127.0	4	20.6	114.3	68.3	22.3	155.4	4
50	2"	60.3	3.9	19.1	120.7	63.5	19.1	152.4	4	22.3	127.0	69.8	19.0	165.1	6
65	2 1/2"	73.0	5.2	22.4	139.7	69.9	19.1	177.8	4	25.4	149.3	76.2	22.3	190.5	8
80	3"	88.9	5.5	23.9	152.4	69.9	19.1	190.5	4	28.4	168.1	79.2	22.3	209.5	8
100	4"	114.3	6.0	23.9	190.5	76.2	19.1	228.6	8	31.7	200.1	85.8	22.3	254.0	8
125	5"	141.3	6.6	23.9	215.9	88.9	22.4	254.0	8	35.0	234.9	98.5	22.3	279.4	8
150	6"	168.3	7.1	25.4	241.3	88.9	22.4	279.4	8	36.5	269.7	98.5	22.3	317.5	12
200	8"	219.1	8.2	28.4	298.5	101.6	22.4	342.9	8	41.1	330.2	111.2	25.4	381.0	12
250	10"	273.0	9.3	30.2	362.0	101.6	25.4	406.4	12	47.7	387.3	117.3	28.4	444.5	16

Latest revision: 05.02.2026. Subject to modifications.
The most recent version of this document is available on awpvalves.com/downloads/

Nominal size		Welding ends acc. to:													
300	12“	323.8	10.3	31.8	431.8	114.3	25.4	482.6	12	50.8	450.8	130.0	31.7	520.7	16
350	14“	355.6	11.1	35.1	476.3	127.0	28.4	533.4	12	53.8	514.3	142.7	31.7	584.2	20
400	16“	406.4	12.7	36.6	539.8	127.0	28.4	596.9	16	57.1	571.5	146.0	35.0	647.7	20

Table 60: Installation lengths

73 Welding neck flanges - AWP

- AWP-FL
- AWP-FL N
- AWP-FL F
- FL - flange
- N - groove
- F - tongue

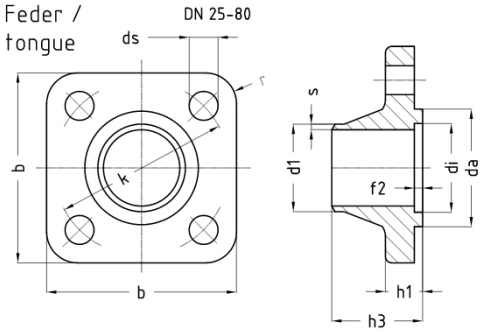

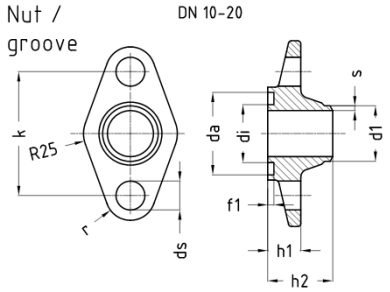

AWP-FL PN25 DN10-20 / PN40 DN25-80																								
	Welding ends											Flange facing design								Screws DIN 931			Sealing ring DIN 2691	
	Series 1		Series 2		ANSI							Groove				Tongue				Quant-ity	Thread	Lengt h		
D N	d1	s	d1	s	d1	s	b	k	r	h1	ds	di	da	f1	h2	di	da	f2	h3				di	da
10	17. 2	1.8	15. 0	2.5	17. 1	2.3	88	60	13	16	14	28	40	3	31. 5	29	39	4	32. 0	2	M 12	45	29	39
15	21. 3	2.0	20. 0	2.5	21. 3	2.8	88	60	13	16	14	28	40	3	31. 5	29	39	4	32. 0	2	M 12	45	29	39
20	26. 9	2.3	25. 0	2.5	26. 7	2.9	88	60	13	16	14	28	40	3	31. 5	29	39	4	32. 0	2	M 12	45	29	39
25	33. 7	2.6	32. 0	3.0	33. 4	3.4	92	85	15	18	14	42	58	3	44. 0	43	57	4	44. 0	4	M 12	50	43	57
32	42. 4	2.6	38. 0	3.0	42. 2	3.6	92	85	15	18	14	42	58	3	44. 0	43	57	4	44. 0	4	M 12	50	43	57
40	48. 3	2.6	45. 0	3.0	48. 3	3.7	92	85	15	18	14	42	58	3	38. 5	43	57	4	38. 5	4	M 12	50	43	57

Latest revision: 05.02.2026. Subject to modifications.
The most recent version of this document is available on awpvalves.com/downloads/

AWP-FL PN25 DN10-20 / PN40 DN25-80																							
50	60.3	2.9	57.0	3.2	60.3	3.9	132	135	20	28	18	84	96	3	43.0	85	95	4	43.0	4	M 16	75	A85x95*
65	76.1	2.9	76.1	3.6	73.0	5.2	132	135	20	28	18	84	96	3	53.5	85	95	4	53.5	4	M 16	75	A85x95*
80	88.9	3.2	88.9	4.0	88.9	5.5	132	135	20	28	18	84	96	3	53.5	85	95	4	53.5	4	M 16	75	A85x95*

Table 61: Installation lengths
* = acc. to DIN 7603

74 Legal notices

- GEA AWP valves must be handled in accordance with the GEA AWP operating regulations.
- The safety instructions mentioned in the operating regulations must be observed.
- A hazard analysis is available for GEA AWP valves.
- GEA AWP valves must only be handled by authorised persons.
- The instructions for the use of personal protective equipment (PPE) must be observed.
- GEA AWP valves must be used for their intended purpose.
- This catalogue has been carefully created and checked; however, it may still contain errors. The technical specifications given in the catalogue are not contractually guaranteed properties. Technical specifications are only binding if they have been confirmed by us in writing.
- We reserve the right to make technical changes.
- Further information on our declarations of conformity, operating regulations, calculation software and the general terms and conditions can be found on our website **www.awpvalves.com** under the Tools/Downloads tab.
- Our general terms and conditions apply.

AWPVALVES.com

GEA AWP GmbH
Armaturenstr. 2
17291 Prenzlau
Germany
phone: +49 3984 8559-0
fax: +49 3984 8559-18
e-mail: info@awpvalves.com

Latest revision: 05.02.2026
©All rights reserved. Subject to modifications. Printed in Germany.