OPERATING INSTRUCTIONS FOR CHECK VALVES

RVAK (273, 274, 27G)

GEA Engineering for a better world.

GEA.com

Table of contents

1 Overview of types **4**
1.1 Type 273 00, 274 00, 27G 4
1.2 Threaded bush, complete 5
2 Technical Parameters **5**
3 Pressure / temperature operating limits **5**
4 Operating Mediums **5**
5 Flow coefficient **5**
6 Safety instructions **6**
7 Anwendung **6**
8 Functional description **6**
9 Installation **6**
10 Wartung **7**
10.1 Changing the stem seal 7
10.2 Replacing the flat gasket/stem/valve disc 7
11 Transport, storage and disposal **8**
12 Garantie **8**
13 Spare parts **8**
14 Marking **11**
15 Hinweis auf Restgefahren entsprechend Druckgeräterichtlinie 2014/68/EU **12**

1 Overview of types

1.1 Type 273 00, 274 00, 27G

DN 25 - DN 65

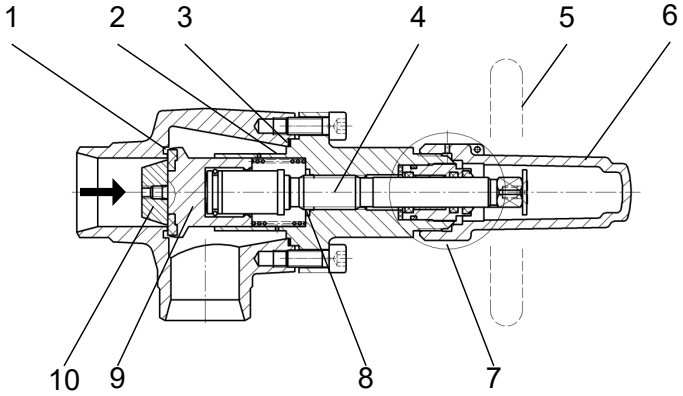

1	Flat sealing ring S	2	Compression spring
3	Flat sealing ring K	4	Stem
5	Handwheel	6	Cap
7	Threaded bush, complete	8	Flat sealing ring R
9	Valve disc	10	Cone

DN 80 - DN 150

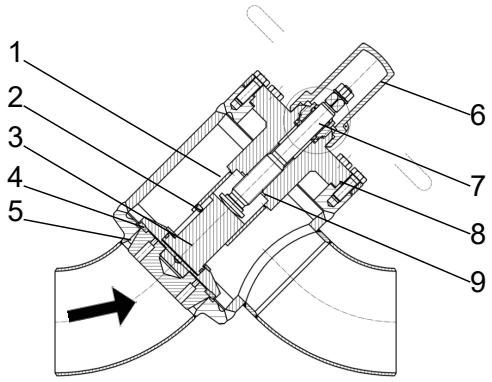

1	Compression spring	2	Grub screw
3	Valve disc	4	Flat sealing ring S
5	Cone	6	Cap
7	Stem	8	Flat sealing ring K
9	Flat sealing ring R		

1.2 Threaded bush, complete

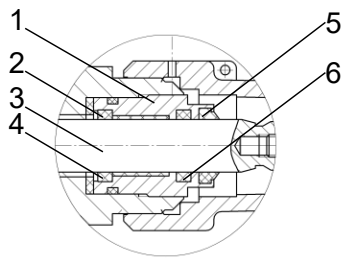

1	Threaded bush	2	PTFE ring
3	Flat gasket SB	4	O-ring B
5	Wiper ring	6	O-ring A

2 Technical Parameters

Body material	Auswahl nach AD-2000 Reihe W
Steel	P235GH, S235JR, S355J2
Low temperature steel (TT)	P215NL, P255QL, P355NL1, G20Mn5QT
NIRO	X5CrNi18-10, GXCrNiMoNb19-11-2 oder gleichwertige

3 Pressure / temperature operating limits

When using screws of property class 8.8, the following values apply:

PN	TB (MWT) [°C]	-60[2)]	-40[2)]	-25[2)]	-10	+50	+150
25	PS (MWP) [bar]	6.25	12.5	18.7	25	25	25
40		10	20	30	40	40	40
63		15.75	31.5	47.2	63	63	63[3)]

When using screws of property class A2-70, the following values apply:

PN	TB (MWT) [°C]	-60[2)]	-60[1)]	-10	+50	+150
25	PS (MWP) [bar]	18.7	25	25	25	25
40		30	40	40	40	40
63		47.2	63	63	63	63[3)]

1) Load case I (low-temperature steel, NIRO)

2) Load case II (acc. to AD2000-W10) (Steel)

3) G20Mn5QT = 43bar/ GXCrNiMoNb19-11-2 = 50bar

Permissible ambient temperature range: -50 to +50 °C

4 Operating Mediums

Suitable for operation with refrigerants acc. to EN 378 Part 1, e.g. NH^3, R22, R134a or mixtures with refrigeration oil, as well as for neutral gaseous and liquid media and glycol-based cooling brine.

5 Flow coefficient

DN	25	32	40	50	65	80	100	125	150
273/27G	14.0	21.0	30.0	42.0	66.5	109.0	151.0	245.0	352.0

DN	25	32	40	50	65	80	100	125	150
274	14.9	24.4	37.0	53.5	80.0	159.0	231.0	373.0	464.0

Installation position: horizontal and vertical with flow from bottom to top
External leakage, seat <15g refrigerant per year at p=10 bar above valve disc

6 Safety instructions

⚠ WARNING

Verbrennungsgefahr bei extremen Temperaturen!

Verbrennungen möglich.

- ▶ Ventil bei extremen Temperaturen mit Schutzhandschuhen bedienen.

NOTICE

Danger from improper handling!

Risk of property damage.

- ▶ Do not install valves with transport or storage damage.
- ▶ Valves must be free of axial forces, bending moments, and torsional moments and must not serve as fixed points for pipework.
- ▶ In the event of oxy-fuel welding or brazing, the flame must not touch the valve.
- ▶ Keep the interior of the valves free of contamination.
- ▶ Opening or closing the valves with a valve wheel wrench or other lever-extending objects is not permissible.
- ▶ Only dismantle valves when the pipework is depressurised, evacuated, and sufficiently ventilated.

7 Anwendung

AWP-Rückschlagventile sind geeignet für den Einsatz in Kältemittelkreisläufen von Industrie-Kälteanlagen. Sie werden sowohl auf der Druck- als auch auf der Saugseite des Verdichters eingesetzt bzw. in Rohrleitungen, in denen nur eine Strömungsrichtung zugelassen ist.

8 Functional description

AWP check valves are self-acting shut-off devices. They are opened by the pressure of the operating medium beneath the valve disc. In the event of standstill or flow reversal, the check valve closes automatically. Additionally, the valve can be closed manually via the rising stem using the handwheel. The valves are closed by turning the handwheel clockwise and opened by turning it anti-clockwise as seen looking towards the handwheel.
Due to the presence of a damping device, this type is particularly suitable for strongly fluctuating capacity requirements. To ensure perfect functional behaviour, ensure that the actual minimum flow rate (e.g. at partial load) is never less than 20% of the maximum nominal valve capacity based on a pressure loss of 0.1 bar. The tightness of the seal depends decisively on the differential pressure across the valve disc. The valves are equipped with a back seat (flat sealing ring R). When the valve is fully open, the sealing elements (O-rings A, B, PTFE rings) on the stem can be safely replaced by unscrewing the threaded bush. .

9 Installation

1. Clean pipework and system components before installation.
   NOTICE! The deviation from parallelism or perpendicularity of the welding ends or flange facings must not exceed 1°. Connecting flanges must be axially aligned. Components with transport and storage damage must not be installed. After removing the pipe plugs, the component can be welded in or installed. Observe the direction of flow (see arrow on nameplate).

2. Vor dem Schweißen die Spindel mittels eines Handrades in Mittelstellung bringen (Ventil halb geöffnet). **NOTICE! Bei Anwendung moderner Schweißverfahren (z. B. WIG, CO2-Lichtbogenschweißen) Ventile zum Einschweißen nicht demontieren.**
3. Befestigungsschrauben und -muttern über Kreuz und gleichmäßig anziehen.
4. After installation, check the smoothness of the stem throughout the entire lift range.
   ⇨ The thread for screwing on the cap must remain free of paint and must be greased (e.g. with RENOLIT UNITEMP 2).

Zur Demontage des Ventileinsatzes ist genügend Platz auf der Seite, auf der sich der Ventildeckel befindet, freizuhalten – siehe folgende Tabelle.

DN	25	32	40	50	65	80	100	125	150
mm	115	115	130	130	145	170	170	240	270

10 Wartung

AWP-Rückschlagventile arbeiten wartungsfrei. Treten Mängel im Funktionsverhalten auf, ist eine Reparatur möglich. Während der Garantiezeit dürfen Reparaturen nur durch den Hersteller (AWP) bzw. mit dessen Einverständnis durch geschultes Instandhaltungspersonal des Betreibers der Anlage vorgenommen werden.

10.1 Changing the stem seal

1. Unscrew the cap! Use a wrench with the size specified in the following table.

DN	25-32	40-65	80-100	125-150
SW	24	32	41	50

2. Bring the stem to the uppermost position using the handwheel.
3. Unscrew the threaded bush anti-clockwise.**NOTICE! Watch out for any residual refrigerant escaping! Leave the threaded bush loose in the bonnet until pressure is completely equalised. Only unscrew it after this.**
4. Then unscrew it completely. To unscrew the threaded bush, use a wrench with the sizes specified in the following table:

DN	25-32	4065	80-100	125-150
SW	22	27	32	46

5. Remove O-rings A, B, PTFE ring and the wiper ring and replace them with new ones.
6. Remove the flat gasket SB from the installation space in the bonnet.
7. Clean the stem and insert a new flat gasket SB into the bonnet.
8. Grease the threaded bush with refrigeration grease (e.g. RENOLIT UNITEMP 2) and tighten hand-tight.
9. To check for leaks, bring the stem to the middle position and brush the bonnet area with a foaming agent.

10.2 Replacing the flat gasket/stem/valve disc

1. Open the valve up to the stop and loosen the bonnet bolts. **NOTICE! Watch out for any residual refrigerant escaping! Leave the bonnet bolts loose in the bonnet until pressure is completely equalised. Only unscrew it after this.**
2. To unscrew, use a wrench or screwdriver with the sizes specified in the following table:

Nominal size [DN]	25-65	80	100	125-200
Bonnet screws	M8x25	M10x30	M12x32	M16x45
	ISO 4762	ISO 4017		

Nominal size [DN]	25-65	80	100	125-200
Wrench size	6	16	18	24

3. After pressure equalisation, unscrew all bonnet bolts completely and pull out the bonnet, including all internal parts attached to it, by the handwheel.
4. Unscrew the handwheel from the stem and, after removing the grub screw (> = DN 80), unscrew the stem from the bonnet.
5. Separate the stem from the valve disc by pulling firmly and, if necessary, attach a new valve disc or assemble the new stem with a new valve disc.
6. Unscrew the cone and grub screw and remove flat gasket S.
7. Insert a new flat sealing ring S, screw on the cone and secure with the grub screw.
8. Before assembly, clean all individual valve components and grease the stems and bonnets.
9. Then insert flat sealing ring K and put on the bonnet.
10. Tighten screws evenly and crosswise.

.

Nominal size [DN]	25-65	80	100	125-200
Bonnet screws	M8x25	M10x30	M12x32	M16x45
	ISO 4762	EN 24014		
Wrench size	6	16	18	24
Tightening torque for 8.8 screws [Nm]	25	49	85	210
Tightening torque for A2-70 screws [Nm]	16	32	56	135

11 Transport, storage and disposal

AWP components are transported protected against impact and covered with foil.

- Storage must take place in dry rooms.
- Ensure that the connection ports are sealed intact.
- Contamination of any kind must be kept away from the interior.
- The external surfaces are provided with a corrosion protection coating for dry storage at room temperature, which is effective for at least 1 year.
- The corrosion protection coating CELEROL® Reaktionsgrund 918 is a good adhesion promoter for 1- and 2-component top coats.
- Dismantle for disposal.
- Collect lubricants during dismantling. The materials must be separated from one another and disposed of in accordance with local regulations.

12 Garantie

Unless agreed otherwise, the statutory warranty provisions apply. For further information, please also refer to our General Terms and Conditions, available on our website **awpvalves.com**.

13 Spare parts

Spare parts orders must contain the following information:

- Quantity

- Designation acc. to images for type
- Order number
- Nominal diameter of the valve
- Year of manufacture of the valve

Handwheel			Cap		
DN	Order number	Dimensions	DN	Order number	Dimensions
25	163 00E13.5 280 00 3	⦸ 120 x 11/14	25	164 02.13.3 180 00 3	M36 x 2.0
32	163 00E13.5 280 00 3	⦸ 120 x 11/14	32	164 02.13.3 180 00 3	M36 x 2.0
40	163 00E15.5 280 00 3	⦸ 140 x 12/16	40	164 02.15.3 180 00 3	M52 x 3.0
50	163 00E15.5 280 00 3	⦸ 140 x 12/16	50	164 02.15.3 180 00 3	M52 x 3.0
65	163 00E15.5 280 00 3	⦸ 140 x 12/16	65	164 02.15.3 180 00 3	M52 x 3.0
80	163 00E18.5 280 00 3	⦸ 180 x 14/22	80	164 02.19.3 180 00 3	M60 x 3.0
100	163 00E18.5 280 00 3	⦸ 180 x 14/22	100	164 02.19.3 180 00 3	M60 x 3.0
125	163 01.20.5 280 00 3	⦸ 300 x 22/26	125	164 02.21.3 180 00 3	M76 x 3.0
150	163 01.21.5 280 00 3	⦸ 300 x 22/26	150	164 02.21.3 180 00 3	M76 x 3.0

Flat sealing ring K AFM30			Flat sealing ring S PTFE		
DN	Order number	Dimensions	DN	Order number	Dimensions
25	163 01.13.4 146 00 3	⦸ 43 x 49.0 x 1.5	25	163 01.13.2 144 00 3	⦸ 20.2 x 38.8 x 3.0
32	163 01.13.4 146 00 3	⦸ 43 x 49.0 x 1.5	32	163 01.13.2 144 00 3	⦸ 20.2 x 38.8 x 3.0
40	163 01.15.4 146 00 3	⦸ 62 x 68.8 x 1.5	40	163 01.15.2 144 00 3	⦸ 32.2 x 57.8 x 4.0
50	163 01.15.4 146 00 3	⦸ 62 x 68.8 x 1.5	50	163 01.15.2 144 00 3	⦸ 32.2 x 57.8 x 4.0
65	163 01.17.4 146 00 3	⦸ 76 x 84.8 x 1.5	65	163 01.17.2 144 00 3	⦸ 55.2 x 71.0 x 4.0
80	163 01.18.4 146 00 3	⦸ 94 x 105 x 1.5	80	163 01.18.2 144 00 3	⦸ 68.0 x 89.0 x 5.0
100	163 01.19.4 146 00 3	⦸ 115 x 129 x 1.5	100	163 01.19.2 144 00 3	⦸ 86 x 109 x 5.0
125	163 01.20.4 146 00 3	⦸ 140 x 159 x 1.5	125	163 01.20.2 144 00 3	⦸ 112 x 134 x 6.0
150	163 01.21.4 146 00 3	⦸ 170 x 188.5 x 2.0	150	163 01.21.2 144 00 3	⦸ 130 x 163 x 6.0

Flat sealing ring SB AFM30			Flat sealing ring R PTFE		
DN	Order number	Dimensions	DN	Order number	Dimensions
25	363 02.13.4 143 00 3	⦸ 14 x 25.5 x 2.0	25	164 02.10.2 145 00 3	⦸ 16 x 21.6 x 2.0
32	363 02.13.4 143 00 3	⦸ 14 x 25.5 x 2.0	32	164 02.10.2 145 00 3	⦸ 16 x 21.6 x 2.0
40	164 02.15.4 143 00 3	⦸ 16 x 26.9 x 2.0	40	264 00.17.2 145 00 3	⦸ 20 x 33.9 x 2.0
50	164 02.15.4 143 00 3	⦸ 16 x 26.9 x 2.0	50	264 00.17.2 145 00 3	⦸ 20 x 33.9 x 2.0
65	164 02.15.4 143 00 3	⦸ 16 x 26.9 x 2.0	65	264 00.17.2 145 00 3	⦸ 20 x 33.9 x 2.0
80	164 02.18.4 143 00 3	⦸ 20 x 32.9 x 2.0	80	164 02.18.2 145 00 3	⦸ 26 x 40.0 x 3.0
100	164 02.18.4 143 00 3	⦸ 20 x 32.9 x 2.0	100	164 02.18.2 145 00 3	⦸ 26 x 40.0 x 3.0
125	164 02.21.4 143 00 3	⦸ 28 x 45.9 x 2.0	125	164 02.21.2 145 00 3	⦸ 36 x 52.0 x 3.0
150	164 02.21.4 143 00 3	⦸ 28 x 45.9 x 2.0	150	164 02.21.2 145 00 3	⦸ 36 x 52.0 x 3.0

	Threaded bush	Stem	Stem
DN	Order number	Type 273 00, 274 00	Type 273 10, 274 104
25	163 00E13.8 142 001	293 00E13.5 061 00 2	
32	163 00E13.8 142 001	293 00E13.5 061 00 2	
40	163 00E15.8 142 001	293 00E15.5 061 00 2	
50	163 00E15.8 142 001	293 00E15.5 061 00 2	
65	163 00E15.8 142 001	293 00E15.5 061 00 2	
80	163 00E18.8 142 001	293 00E18.5 061 00 2	293 10E18.5 061 00 2
100	163 00E18.8 142 001	293 00E18.5 061 00 2	293 10E18.5 061 00 2
125	163 00E21.8 142 001	293 00E21.5 061 00 2	293 10E21.5 061 00 2
150	163 00E21.8 142 001	293 00E21.5 061 00 2	293 10E21.5 061 00 2

O-ring A CR75			O-ring B CR75		
DN	Order number	Dimensions	DN	Order number	Dimensions
25	73 75 91	⦸ 14 x 3	25	73 75 22	⦸ 22 x 2
32	73 75 91	⦸ 14 x 3	32	73 75 22	⦸ 22 x 2
40	73 75 59	⦸ 16 x 3	40	73 75 01	⦸ 22 x 3
50	73 75 59	⦸ 16 x 3	50	73 75 01	⦸ 22 x 3
65	73 75 59	⦸ 16 x 3	65	73 75 01	⦸ 22 x 3
80	73 75 25	⦸ 20 x 3	80	73 75 03	⦸ 28 x 3
100	73 75 25	⦸ 20 x 3	100	73 75 03	⦸ 28 x 3
125	73 75 96	⦸ 28 x 5	125	73 75 16	⦸ 40 x 3
150	73 75 96	⦸ 28 x 5	150	73 75 16	⦸ 40 x 3

PTFE ring			Wiper ring		
DN	Order number	Dimensions	DN	Order number	Dimensions
25	72 84 00	⦸ 14 x 19 /3.9	25	73 98 55	14 x 20 x 5
32	72 84 00	⦸ 14 x 19 /3.9	32	73 98 55	14 x 20 x 5
40	72 84 01	⦸ 16 x 21 /3.9	40	73 98 38	16 x 22 x 5
50	72 84 01	⦸ 16 x 21 /3.9	50	73 98 38	16 x 22 x 5
65	72 84 01	⦸ 16 x 21 /3.9	65	73 98 38	16 x 22 x 5
80	72 84 02	⦸ 20 x 25 /3.9	80	73 98 41	20 x 28 x 7
100	72 84 02	⦸ 20 x 25 /3.9	100	73 98 41	20 x 28 x 7
125	72 84 03	⦸ 28 x 28 /5.9	125	73 98 54	28 x 36 x 7
150	72 84 03	⦸ 28 x 28 /5.9	150	73 98 54	28 x 36 x 7

Valve disc		Compression spring		
DN	Order number	DN	Order number	Dimensions
25-32	37300E13.5 125 00 1	25-32	327 02.13.8 233 00 3	1.6 x 31.5 lo x 27.4 di
40-50	327 05.14.5 125 00 1	40-50	307 02.17.8 233 00 3	2.0 x 62 lo x 43.0 di
65	327 05.17.5 125 00 1	65	307 02.19.8 233 01 3	4.0 x 105 lo x 66.0 di
80	327 05.18.5 125 00 1	80	307 02.19.8 233 01 3	4.0 x 105 lo x 66.0 di
100	327 05.19.5 125 00 1	100	307 02.19.8 233 01 3	4.0 x 105 lo x 66.0 di
125	327 05.20.5 125 00 1	125	307 02.20.8 233 01 3	6.0 x 170 lo x 81 di
150	327 05.21.5 125 00 1	150	562036	5.5 x 278 lo x 89.5 di

In case of doubt, please contact our Sales Support either via our website awpvalves.com/contact or by email to **info@awpvalves.com**. The most reliable method to correctly identify the required spare part is to send a photo of the nameplate on which the serial number of the valve is clearly visible.

14 Marking

The marking of AWP check valves is carried out in accordance with Pressure Equipment Directive 2014/68/EU.
Nameplate on body

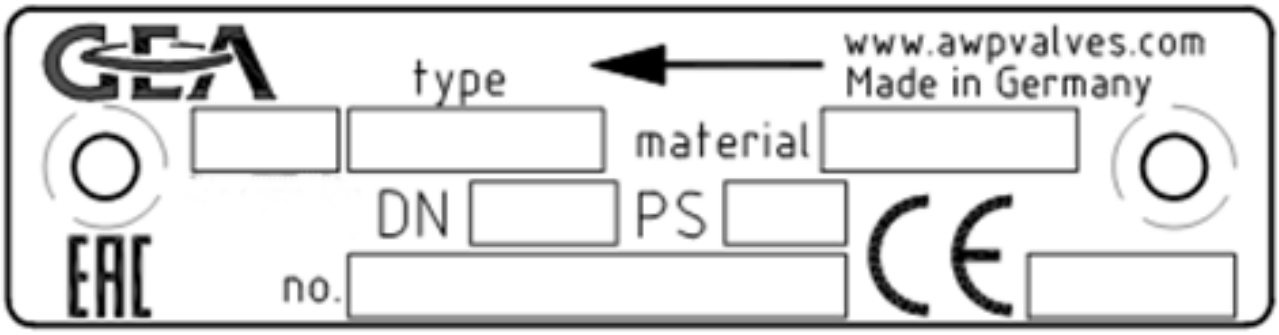

PS [bar]	Max. permissible operating pressure
DN [mm]	Nominal size
DIN EN ISO 21922	Refrigerating valves, safety requirements, testing and marking

15 Hinweis auf Restgefahren entsprechend Druckgeräterichtlinie 2014/68/EU

Residual risks that cannot be avoided by the manufacturer exist due to:

NOTICE

- ▶ Do not loosen bonnets (without authorisation) during operation.
- ▶ Do not incorrectly assemble flange connections (inlet and outlet flanges, flanged bonnets).
- ▶ Contamination in the operating medium or improper handling of internal components can lead to damage to the seat seal.
- ▶ Non-compliance with the operating limits and manufacturer's regulations according to these operating instructions.

Engineering for a better world.

GEA.com

GEA AWP GmbH
Armaturenstr. 2
17291 Prenzlau
Germany
phone: +49 3984 8559-0
fax: +49 3984 8559-18
e-mail: info@awpvalves.com

Latest revision: 02.02.2026
©All rights reserved. Subject to modifications. Printed in Germany.