OPERATING INSTRUCTIONS FOR FILTER DRIERS

FT 567

Engineering for a better world.

GEA.com

Table of contents

1 Overview of types **4**

1.1 Scope of delivery 5

2 Technical characteristics **6**

3 Pressure/temperature operating limits **6**

4 Operating media **6**

5 Safety instructions **7**

6 Application **7**

7 Functional description **7**

8 Installation **7**

8.1 Commissioning 8

9 Maintenance **9**

10 Transport, storage and disposal **9**

11 Garantie **9**

12 Spare parts **9**

13 Marking **10**

14 Note on residual hazards in accordance with Pressure Equipment Directive 2014/68/EU **10**

1 Overview of types

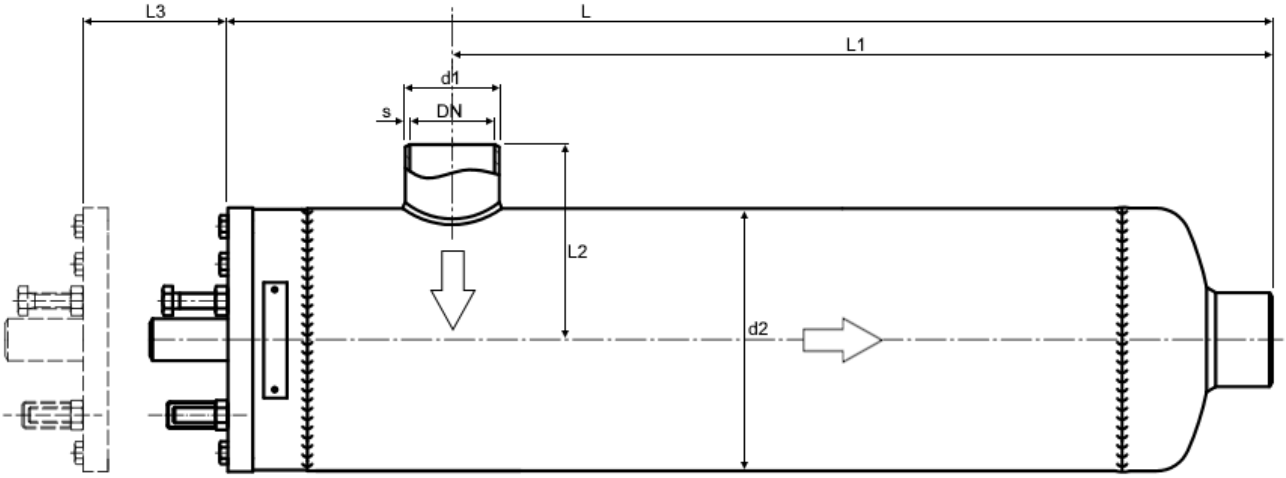

Dimensions in mm											
	Filter block		Welding ends								
	Type	Quantity	ISO R1		ANSI Schedule 40						
DN			d1	s	d1	s	d2	L	L1	L2	L3
20	760	1	26.9	2.3	26.7	2.9	140	310	175	110	185
25	760	1	33.7	2.6	33.4	3.4	140	310	175	110	185
32	760	2	42.4	2.6	42.2	3.6	140	500	300	110	330
40	760	3	48.3	2.6	48.3	3.7	140	600	445	110	470
50	760	4	60.3	2.9	60.3	3.9	140	740	585	110	610
50	1480	3	60.3	2.9	60.3	3.9	168	670	525	125	545
65	1480	4	76.1	2.9	73.0	5.2	168	850	690	125	710
80	1480	4	88.9	3.2	88.9	5.5	168	850	690	175	710
80	4810	3	88.9	3.2	88.9	5.5	TBD	TBD	TBD	TBD	TBD
100	4810	4	114.3	3.6	114.3	6.0	TBD	TBD	TBD	TBD	TBD
125	5970	4	139.7	4.0	141.3	6.6	406	943	641	263	810
150	5970	6	168.3	4.5	168.3	7.1	406	1275	970	263	1140
200	5970	8	219.1	6.3	219.1	8.2	406	TBD	TBD	TBD	TBD

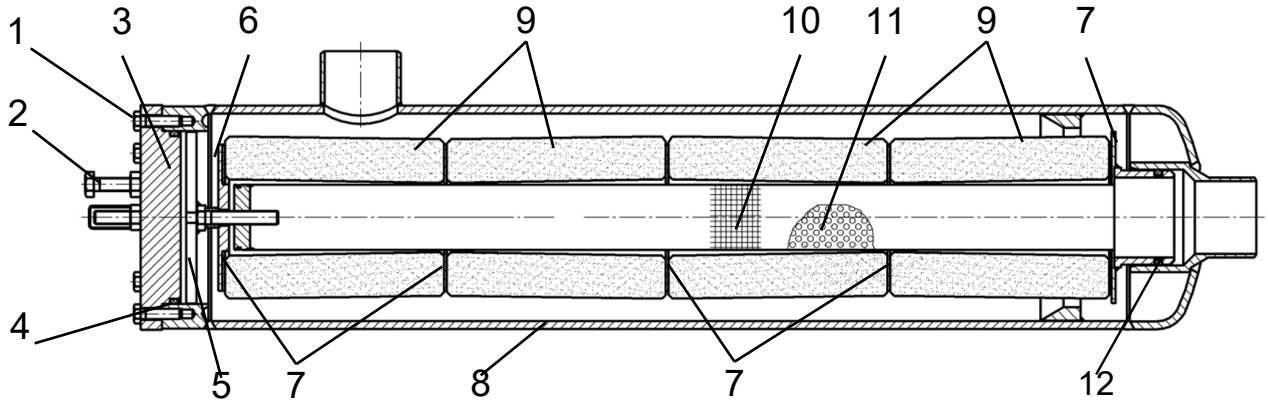

#	Component	Material
1	Bonnet screws	8.8 / A2-70
2	Stud with nut	8.8 / A2-70
3	Bonnet	1.0577 / 1.0566 / 1.4301
4	Bonnet gasket (O-ring without flat gasket)	CR / HNBR / FPM / AFM30
5	T-handle	1.0038
6	Pressure plate	1.0038
7	Flat gasket FB	AFM PN 6
8	Body	1.0345 / 1.0356 / 1.4301
9	Filter block	Molecular sieve-Al2O3
10	Strainer mesh	1.4301
11	Perforated plate (filter carrier)	1.4301
12	O-ring	CR / HNBR / FPM

1.1 Scope of delivery

The following accessories are supplied as standard with AWP filter driers:

DN	Flat gaskets (item 7)			Filter blocks (item 9)			O-ring (CR) (item 12)		O-ring (CR) (item 4)*	
	Quant-ity	Dim.	Art. no.	Quant-ity	Type	Art. no.	Dim.	Art. no.	Dim.	Art. no.
20-25	2	49x85x2	739791	1	760	740002	63x5	737545	97x5	737566
32	3	49x85x2	739791	2	760	740002	63x5	737545	97x5	737566
40	4	49x85x2	739791	3	760	740002	63x5	737545	97x5	737566
50	5	49x85x2	739791	4	760	740002	63x5	737545	97x5	737566
50	4	61x95x2	739790	3	1480	74001	63x5	737545	120x5	737544
65-80	5	61x95x2	739790	4	1480	74001	63x5	737545	120x5	737544
80	4	TBD		3	4810		TBD		TBD	
100	5	TBD		4	4810		TBD		TBD	

DN	Flat gaskets (item 7)			Filter blocks (item 9)			O-ring (CR) (item 12)		O-ring (CR) (item 4)*	
125	5	150x245x2	739792	4	5970	74005	180x5	737505	280x297x2	56700.21.4146 003
150	7	150x245x2	739792	6	5970	74005	180x5	737505	280x297x2	56700.21.4146 003
200	9	150x245x2	739792	8	5970	74005	180x5	737505	280x297x2	56700.21.4146 003
* DN 125-200: Item 4 = flat gasket AFM30										

2 Technical characteristics

Body material	AD-2000 Series W
Steel	P235GH, S235JR+N, S355J2+N
Low-temperature steel:	P215NL, P255QL, P355NL1
Stainless steel:	X5CrNi18-10 or equivalent

3 Pressure/temperature operating limits

Pressure / temperature operating limits:
PS: Max. permissible operating pressure in bar
TS: Permissible operating temperature in °C associated with the permissible operating pressures (PS)
PN: Nominal pressure rating
When using screws of property class 8.8, the following values apply:

PN	TB (MWT) [C°]	-35[2)]	-25[2)]	-10	+50	+120
25	PS (MWP) [bar]	12.5	18.7	25	25	25
40		20	30	40	40	40

When using screws of property class A2-70, the following values apply:

PN	TB (MWT) [C°]	-35[2)]	-35[1)]	-25[2)]	-25[1)]	-10	+50	+120
25	PS (MWP) [bar]	18.7	25	18.7	25	25	25	25
40		30	40	30	40	40	40	40
Load case I (low-temperature steel, NIRO) Load case II (acc. to AD2000-W10) (Steel)								
Permissible ambient temperature range: -50 to +50 °C								

4 Operating media

- Liquid refrigerants! No NH3!
- External leakage, seat <15g refrigerant per year
- Mesh size of strainer mesh (item 10): 125 µm

5 Safety instructions

NOTICE

Danger from improper handling!

Risk of property damage.

- ▶ Do not install filter driers with transport or storage damage.
- ▶ Filter driers must be free of axial forces, bending moments, and torsional moments and must not serve as fixed points for pipework.
- ▶ Keep the interior of the filter driers free of contamination.
- ▶ Only change the strainer insert when the filter housing is depressurised and sufficiently ventilated.

6 Application

AWP filter driers are suitable for use in refrigerant liquid lines, in refrigeration and air conditioning systems with fluorinated refrigerants; also as cleaning driers on the suction side; in systems with capacities between 35 and 465 kW. They protect the system on the refrigerant side against moisture, dirt, acid, oil decomposition products, and sludge formation.

7 Functional description

AWP filter driers are equipped with replaceable filter blocks. The removable bonnet enables replacement. The filter blocks are held in the body by a filter carrier, which is also designed as a filter strainer. The liquid refrigerant enters the integral filter through the lateral inlet connection and flows through the filter blocks as well as the filter carrier from the outside in. The filter blocks consist of a desiccant mass produced on the basis of molecular sieve Al-oxide.

Properties:

- Optimal filter surface area (zeolitic molecular sieves)
- No risk of clogging
- Low pressure loss
- Particle retention capacity > 32 µm
- No abrasion from the filter block
- Binding of water molecules
- Protection against dirt, oil decomposition products, and sludge formation
- Prevention of acid formation
- Any installation position
- The dimensions of the filter blocks comply with international standards.

8 Installation

Primarily install AWP filter driers directly in the liquid line upstream of the expansion valve. Provide sufficient space on the bonnet side for disassembling the internal parts (see **Overview of types [▶ 4]**). Any installation position is permissible for the AWP filter driers. Observe the direction of flow. Disassembly of the internal parts is not necessary for welding in the AWP filter driers. Observe corresponding welding regulations.

8.1 Commissioning

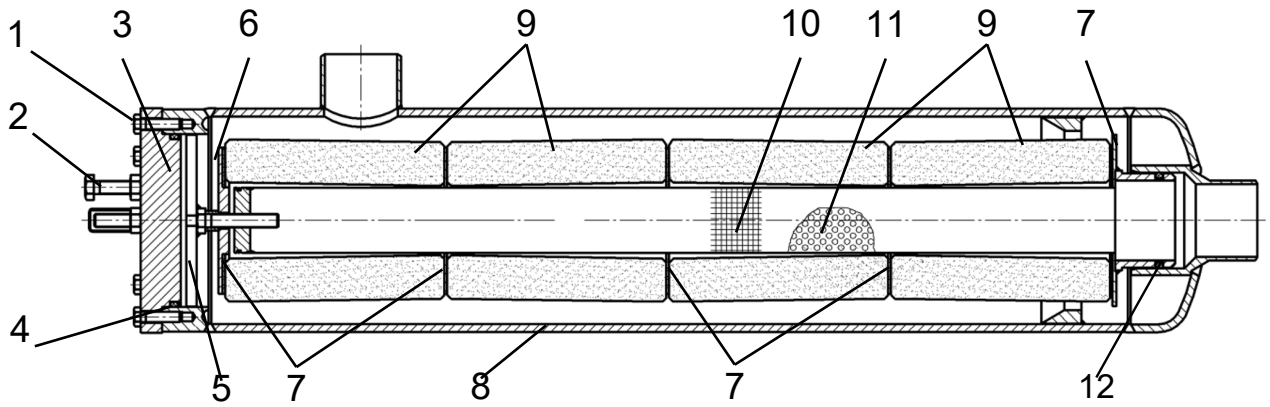

1. Shortly before commissioning the refrigeration system, equip the integral filter body with the filter blocks (item 9) and the flat gaskets (item 7).
2. Remove bonnet (item 3). For this purpose, use a wrench according to the following table.**NOTICE! After unscrewing the hexagon screws and before unscrewing the nuts from the studs (item 2), loosen them to allow any existing pressure to escape.**
3. Pull out the filter carrier (item 11) at the T-handle (item 5).
4. Unscrew the T-handle from the filter carrier and remove the pressure plate (item 6).
5. Open the packaging of the filter blocks. Remove filter blocks (item 9) and slide them onto the filter carrier, using one flat gasket (item 7) as an intermediate layer for each.
6. Place the pressure plate on the last flat gasket and tighten firmly with the T-handle.
7. Replace O-ring (item 12).
8. Push the filter carrier completely into the body. The T-handle must be seated at least 15 mm deep in the body.
9. Replace bonnet gasket (item 4) (O-ring or flat gasket), then put bonnet in place.
10. Tighten all bonnet screws crosswise. See the following table for wrench size and tightening torque:
11. After professionally completed installation, slowly fill the evacuated integral filter with refrigerant, observing the direction of flow. Start up the refrigeration system after pressure equalization has taken place.

Nominal size	DN 20-50	DN 50-80	DN 80-100	DN 125-200
Filter block type	760	1480	4810	5970
Screws DIN EN 24017	M12x25	M12x30	TBD	M20x60
Wrench size	SW 18	SW 18	TBD	SW 30
Tightening torque [Nm] (8.8)	85	85	TBD	425
Tightening torque [Nm] (A2 - -70)	56	56	TBD	275

9 Maintenance

AWP filter driers operate maintenance-free. The condition of the filter blocks is evident from the system behaviour or the indicator sight glass. Increased dirt contamination causes increased pressure loss in the filter. This leads to cooling or icing of the pipeline behind the integral filter, and bubbles form in the sight glass. If the filter blocks are saturated with moisture, this is noticeable by a change in colour of the indicator sight glass (e.g., blue to pink) or, in extreme cases, by freezing of the expansion valve. If the above-mentioned phenomena occur, the filter blocks must be replaced. For this purpose, the refrigerant must be recovered and the procedure described in the chapter **Commissioning [▶ 8]** followed.

10 Transport, storage and disposal

Transport is carried out protected against impact, covered with foil, on EURO pallets or, in the case of corresponding batch sizes, in wooden crates. The filter blocks, located in airtight sealed cans, and the other individual parts are delivered in boxes. The filter blocks must be protected against moisture, impact, and shock loads. Storage must take place in dry rooms. The integral filters can be stacked on top of each other in a horizontal position on EURO pallets and secured against slipping. Ensure that the connection ports are sealed intact. Contamination of any kind must be kept away from the interior. The external surfaces of AWP filter driers are provided with a corrosion protection coating for dry storage at room temperature, which is effective for at least 1 year. The corrosion protection coating CELEROL® Reaktionsgrund 918 is a good adhesion promoter for 1- and 2-component top coats. Dismantle the valves for disposal. Collect lubricants during dismantling. The valve materials must be separated from one another and disposed of in accordance with local regulations.

11 Garantie

Unless agreed otherwise, the statutory warranty provisions apply. For further information, please also refer to our General Terms and Conditions, available on our website **awpvalves.com**.

12 Spare parts

The items mentioned in the chapter **Scope of delivery [▶ 5]** are available individually as spare parts. These items are also available as a set titled "Filter block complete", consisting of filter blocks, flat gaskets and O-rings. For the item numbers of the filter blocks complete with various O-ring materials, see the following table.

DN	Filter block type	Filter block complete (CR)	Filter block complete (FPM)	Filter block complete (HNBR)
20-25	760	56701.12.5320001	56701.12.53200B1	56701.12.53200C1
32	760	56702.13.5320001	56702.13.53200B1	56702.13.53200C1
40	760	56703.14.5320001	56703.14.53200B1	56703.14.53200C1
50	760	56704.15.5320001	56704.15.53200B1	56704.15.53200C1
50	1480	56703.15.5320001	56703.15.53200B1	56703.15.53200C1
65-80	1480	56704.17.5320001	56704.17.53200B1	56704.17.53200C1
80	4810	56703.18.5320001	56703.18.53200B1	56703.18.53200C1
100	4810	56704.18.5320001	56704.18.53200B1	56704.18.53200C1
125	5970	56704.20.5320001	56704.20.53200B1	56704.20.53200C1
150	5970	56706.21.5320001	56706.21.53200B1	56706.21.53200C1
200	5970	56708.23.5320001	56708.23.53200B1	56708.23.53200C1

Note: Dimensions of the filter blocks

Type	Inner diameter	Outer diameter	Length
760	45	95	142
1480	52	122	165
4810	TBD	TBD	TBD

Type	Inner diameter	Outer diameter	Length
5970	140	270	160

In case of doubt, please contact our Sales Support either via our website awpvalves.com/contact or by email to **info@awpvalves.com**. The most reliable method to correctly identify the required spare part is to send a photo of the nameplate on which the serial number of the valve is clearly visible.

13 Marking

AWP filter driers are marked in accordance with PED 2014/68/EU by means of a nameplate on the surface of the bonnet.

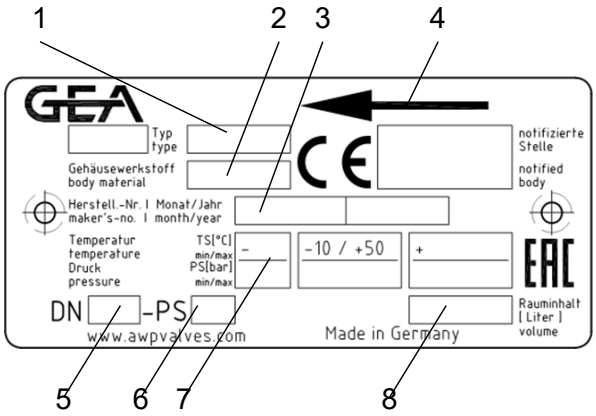

1	Type designation	2	Material number
3	Serial number	4	Flow direction
5	Nominal size (DN)	6	Max. permissible operating pressure (PS)
7	Operating temperature associated with the operating pressure	8	Volume (litres) - content of the pressure vessel

DN	20-25	32	40	50-4	50-3	65-80	80-3	100	125	150	200
Volume (litres)	2.8	4.7	6.6	8.5	11.3	14.7	TBD	TBD	71	106	TBD

14 Note on residual hazards in accordance with Pressure Equipment Directive 2014/68/EU

NOTICE

- ▶ Do not loosen the bonnet (without authorisation) during operation or when under internal pressure.
- ▶ There may be defects in weld seams that could not be detected in previous inspections.
- ▶ Do not incorrectly assemble flange connections (inlet and outlet flanges, bonnets).
- ▶ Contamination in the operating medium or improper handling of internal components can lead to damage to gaskets.
- ▶ Observe operating limits and manufacturer's instructions in accordance with these operating instructions.

Engineering for a better world.

GEA.com

GEA AWP GmbH
Armaturenstr. 2
17291 Prenzlau
Germany
phone: +49 3984 8559-0
fax: +49 3984 8559-18
e-mail: info@awpvalves.com

Latest revision: 02.02.2026
©All rights reserved. Subject to modifications. Printed in Germany.