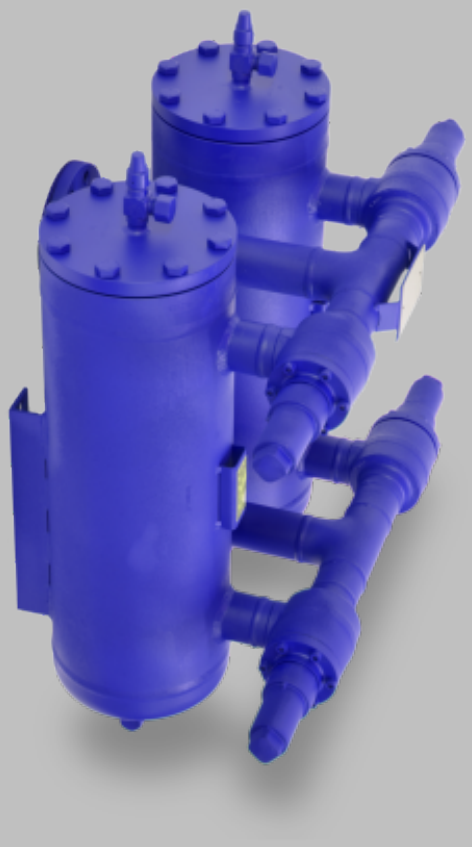

OPERATING INSTRUCTIONS FOR DOUBLE-OIL-FILTERS

DOF (580, 581, 582, 583, 584)

GEA Engineering for a better world.

GEA.com

Table of contents

1 Overview of types **4**

2 Technical characteristics **4**

3 Pressure/temperature operating limits **5**

4 Operating media **5**

5 Flow coefficient **5**

6 Safety instructions **5**

7 Application **5**

8 Functional description **6**

9 Installation **6**

10 Maintenance **6**

11 Transport, storage and disposal **7**

12 Garantie **7**

13 Spare parts **7**

14 Marking **8**

14.1 Marking of double oil filters 8

15 Note on residual hazards in accordance with Pressure Equipment Directive 2014/68/EU **9**

1 Overview of types

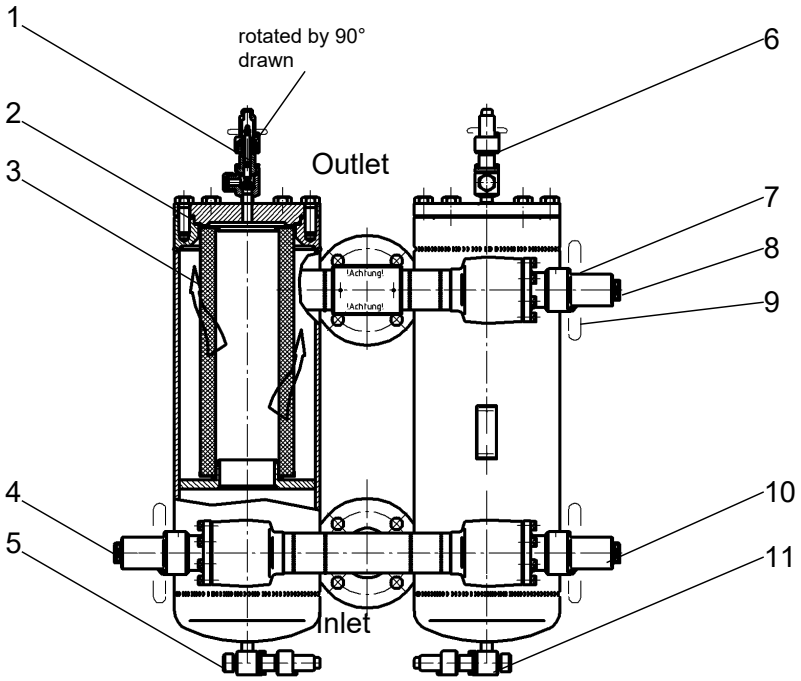

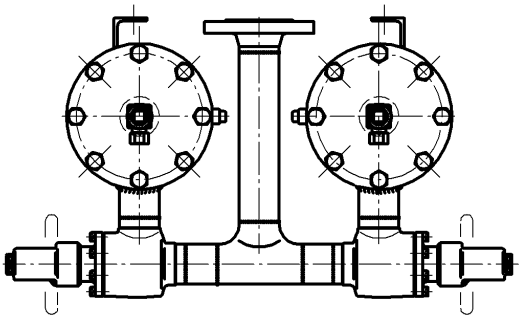

1	Venting valve G 1/2"	2	Flat sealing ring K1
3	Filter element	4	Shut-off valve
5	Drain valve G 1/2"	6	Venting valve G 1/2"
7	Cap	8	Shut-off valve
9	Handwheel	10	Shut-off valve
11	Drain valve		

2 Technical characteristics

Body material	Selection acc. to AD-2000 Series W
Steel	P235GH, S235JR, S355J2
Low-temperature steel	P215NL, P255QL, P355NL1

3 Pressure/temperature operating limits

When using screws of property class 8.8:

PN	TB (MWT) [°C]	-60[2)]	-40[2)]	-25[2)]	-10	+50	+150
25	PS (MWP) [bar]	6.25	12.5	18.7	25	25	25
40		10	20	30	40	40	40

When using screws of property class A2-70:

PN	TB (MWT) [°C]	-60[2)]	-60[1)]	-10	+50	+150
25	PS (MWP) [bar]	18.7	25	25	25	25
40		30	40	40	40	40
1) Load case I (TT, NIRO) 2) Load case II (acc. to AD2000-W10) (St)						
Permissible ambient temperature range: -50 to +50 °C						

4 Operating media

Refrigerants EN 378 Part 1, e.g. NH3, R22, R134a, blends and refrigeration machine oil, non-corrosive gases and liquids e.g. propane, butane, glycol-based brines.

5 Flow coefficient

Volume flow [l/min]	depending on viscosity and temperature
Installation position	vertical
Flow direction through the filter element	from inside out
Leakage	to atmosphere < 5 g (refrigerant per year)
Filter rating [µm]	10
Filter material	Glass fibre

:

6 Safety instructions

NOTICE

Danger from improper handling!

Risk of property damage.

- ▶ Do not install filters with transport or storage damage.
- ▶ Filters must be free of axial forces, bending moments, and torsional moments and must not serve as fixed points for pipework.
- ▶ In the event of oxy-fuel welding or brazing, the flame must not touch the filter.
- ▶ Keep the interior of the filters free of contamination.
- ▶ Only change the filter element when the filter housing is depressurised and sufficiently ventilated.

7 Application

AWP double oil filters are suitable for use in oil circuits for industrial refrigeration systems.

8 Functional description

AWP double oil filters ensure the replacement of filter elements without interruption of operation. Paper or glass fibre filters with a filter fineness of 10 µm are used. The flow is from inside out. The size selection is based on the flow rate and the viscosity of the oil. AWP valves (shut-off, vent and drain valves) are to be operated by a hand-wheel. The valves are closed by turning clockwise and opened by turning anti-clockwise when looking at the handwheel. The valves are shut-off devices and must only be operated in the "Open" or "Closed" position. When opening the valve, the stem must be moved to the top position until it reaches the stop (fully open). The valves are equipped with a back seat (flat sealing ring R). **NOTICE! Only operate shut-off valves in pairs! Only ever put one filter into operation.**

9 Installation

1. Clean pipework and system components before installation.
   NOTICE! The deviation from parallelism or perpendicularity of the welding ends or flange facings must not exceed 1°. Connecting flanges must be axially aligned. Components with transport and storage damage must not be installed. After removing the pipe plugs, the component can be welded in or installed. Observe the direction of flow (see arrow on nameplate).
2. **NOTICE! When using modern welding processes (e.g. TIG, CO2 arc welding), do not dismantle weld-in filters. Provide sufficient space on the bonnet side for changing the filter elements.**

Filter	361	561	901	1401	1801
DN	20 25 32	40 50	40 50 65	65 80	80
mm	300	350	450	600	765

10 Maintenance

AWP double oil filters work maintenance-free. If an increased pressure drop occurs across the filter in operation, switch to the filter at rest. **NOTICE! Only operate shut-off valves in pairs!** Replace the dirty filter element on the shut-off filter with a new one.
For valve maintenance, see operating instructions for shut-off valves.

Replacing filter elements

1. Bring the filter body into a depressurised and oil-free state.
2. Leave the vent and drain valve in the open position.
3. Loosen and remove the bonnet bolts and remove the bonnet.

DN	20	25	32	40	50	65	80
Screws ISO 4017	M12 x 30			M16 x 45			
	SW 18			SW 24			

4. Take out the filter element and dispose of it professionally.
5. Clean the inside of the filter body.
6. Insert a new flat sealing ring K1 and a new filter element into the body according to the spare parts overview.
7. Fit the bonnet and tighten evenly and in a crosswise pattern with the screws.

DN	20	25	32	40	50	65	80
Screws ISO 4017	M12 x 30	M12 x 30	M12 x 30	M16 x 45	M16 x 45	M16 x 45	M16 x 45
	SW 18			SW 24			
Tightening torque (8.8)	85			210			
Tightening torque (A2-70)	56			135			

8. Close the vent and drain valve. Brush the bonnet area with foaming agents and carry out a leakage test.
9. To start up, open the shut-off valves and vent the filter via the vent valve.

11 Transport, storage and disposal

AWP components are transported protected against impact and covered with foil.

- Storage must take place in dry rooms.
- Ensure that the connection ports are sealed intact.
- Contamination of any kind must be kept away from the interior.
- The external surfaces are provided with a corrosion protection coating for dry storage at room temperature, which is effective for at least 1 year.
- The corrosion protection coating CELEROL® Reaktionsgrund 918 is a good adhesion promoter for 1- and 2-component top coats.
- Dismantle for disposal.
- Collect lubricants during dismantling. The materials must be separated from one another and disposed of in accordance with local regulations.

12 Garantie

Unless agreed otherwise, the statutory warranty provisions apply. For further information, please also refer to our General Terms and Conditions, available on our website **awpvalves.com**.

13 Spare parts

Spare parts for the shut-off, vent and drain valves can be found in the respective operating instructions.

Type	Flat sealing ring K1	Order number	Dimensions
	DN		
	20		
580	25	163 01.19.4 146 00 3	⌀ 129 x ⌀ 115 x 1.5
	32		
581	40		
582	50	163 01.20.4 146 00 3	⌀ 159 x ⌀ 140 x 1.5
583	65		
	80		

Type	Filter element	Order number	Dimensions
	DN		
	20		
580	25	57 50 46	101 x 60 / 230 (361)
	32		
581	40	57 50 47	142 x 93 / 257 (561)
	50		
	40		
582	50	57 50 48	142 x 93 / 378 (901)
	65		
583	65	57 50 49	142 x 93 / 505 (1401)

Type	Filter element	Order number	Dimensions
	80		
584	80	57 50 41	142 x 93 / 751 (1801)

14 Marking

The marking of AWP oil filters is carried out in accordance with Pressure Equipment Directive 2014/68/EU.

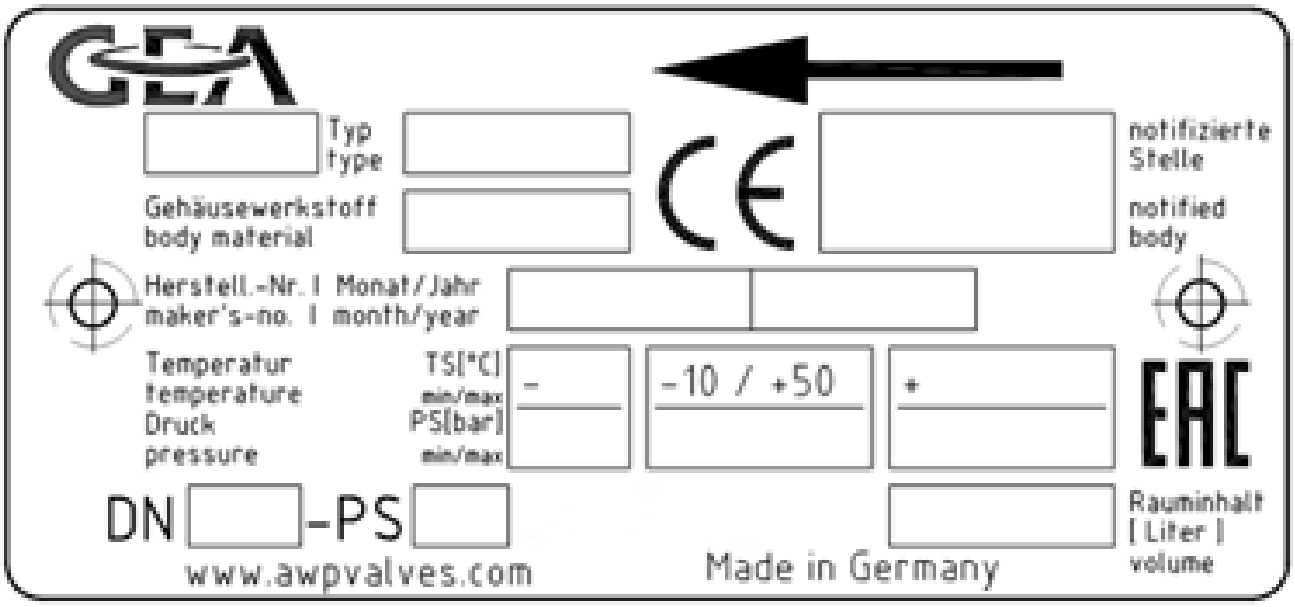

TS (MWT) [C°]	Operating temperature associated with the operating pressure
PS [bar]	Max. permissible operating pressure
DN [mm]	Nominal size
DIN EN ISO 21922	Refrigerating valves, safety requirements, testing and marking
Volume [litres]	Content of the pressure vessel

Volume [litres]							
Filter type	DN 20	25	32	40	50	65	80
580 ..	7.3	7.3	7.3				
581 ..				17.6	17.6		
582 ..				20.5	20.5	20.5	
583 ..						29.3	29.3
584 ..							30.5

14.1 Marking of double oil filters

AWP double oil filters are equipped with additional information plates that provide information on the handling of the shut-off valves. Information plate on the filter. The double oil filter consists of 2 filter bodies. The shut-off valves on one of the two filter bodies are a pair.
Stems of the shut-off valves of one of the two filter bodies protrude far from the bonnet = filter is active.
Stems of the shut-off valves of one of the two filter bodies protrude from the bonnet only with the stem square = filter is passive

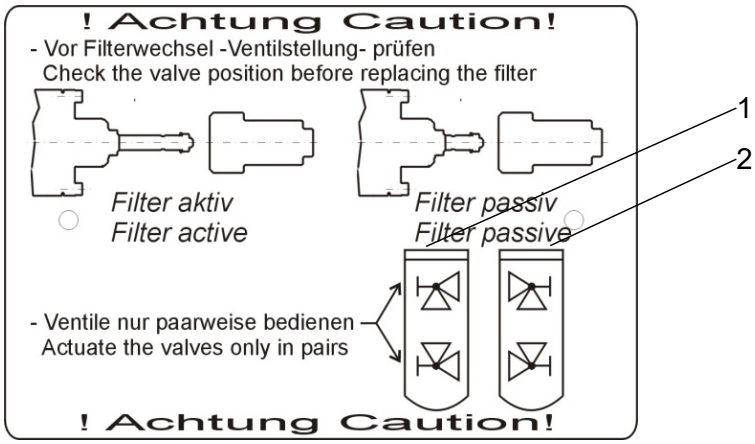

1	Filter housing 1	2	Filter housing 2

15 Note on residual hazards in accordance with Pressure Equipment Directive 2014/68/EU

NOTICE

- ▶ Do not loosen the bonnet (without authorisation) during operation or when under internal pressure.
- ▶ There may be defects in weld seams that could not be detected in previous inspections.
- ▶ Do not incorrectly assemble flange connections (inlet and outlet flanges, bonnets).
- ▶ Contamination in the operating medium or improper handling of internal components can lead to damage to gaskets.
- ▶ Observe operating limits and manufacturer's instructions in accordance with these operating instructions.

Engineering for a better world.

GEA.com

GEA AWP GmbH
Armaturenstr. 2
17291 Prenzlau
Germany
phone: +49 3984 8559-0
fax: +49 3984 8559-18
e-mail: info@awpvalves.com

Latest revision: 02.02.2026
©All rights reserved. Subject to modifications. Printed in Germany.