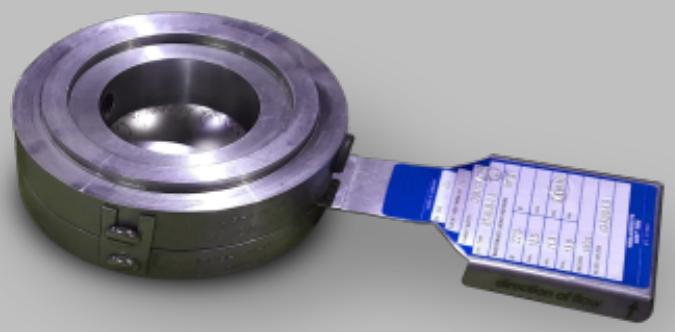

OPERATING INSTRUCTIONS FOR RUPTURE DISCS

BT-KUB, IG-KUB

GEA Engineering for a better world.

GEA.com

Table of contents

1 General ... 5

1.1 Target group ... 5

1.2 Associated documents ... 5

1.3 Warning instructions and signal words ... 5

2 Safety ... 5

2.1 Intended use ... 5

2.2 Product safety ... 5

2.3 Operator obligations ... 6

2.4 Personnel qualification ... 6

2.5 Conversions, repair, changes ... 6

2.6 Personnel obligations ... 6

3 Design, function and marking ... 7

3.1 Design ... 7

3.2 Function ... 7

3.3 Marking ... 8

3.3.1 Nameplate ... 8

3.3.2 Marking of the bursting disc holder ... 8

3.3.3 Valid types of bursting disc ... 9

3.3.4 Valid types of bursting disc holder ... 9

3.3.5 Valid standards and guidelines ... 9

4 Transport and storage ... 10

4.1 Transport ... 10

4.2 Storage ... 10

5 Installation ... 10

5.1 General conditions for installation ... 10

5.2 Inserting the bursting disc into the bursting disc holder ... 11

5.3 Installing the bursting disc with bursting disc holder into the system ... 12

6 Commissioning the system with the bursting disc ... 12

7 Measures after a trigger ... 13

7.1 Securing the danger area ... 13

7.2 Replacing the bursting disc ... 13

8 Maintenance and servicing ... 13

8.1 Testing ... 13

8.2 Cleaning ... 14

9 Disposal ... 14

9.1 Disassembly ... 14

9.2 Disposal ... 14

10 Appendix ... 15

10.1 Technical data 15
10.1.1 Bursting disc holder IG-KUB for flanges according to EN 1092-1 Type 11 and DIN 2632 et seq. 15
10.1.2 Bursting disc holder IG-KUB for ANSI flanges according to ASME B 16.5 (<DN 600) and ASME B16.47 Series A (>DN 600) 18

11 Spare parts 20

11.1 Optional accessories 20

11.2 Contact 20

1 General

This manual is part of the buckling pin reverse bursting disc BT-KUB® / the bursting disc holder IG-KUB® and describes the safe and proper use in all operating phases. This manual may not be reproduced, distributed or used without authorisation for competition purposes or communicated to others, either in full or in part.

1.1 Target group

Target group	Task
Operator	Keep this manual and the associated documents available at the place of use, also for later use.
	Urge employees to read and observe this manual and the associated documents, in particular the safety and warning instructions.
	Observe additional system-related operating instructions, provisions and regulations.
Specialist personnel	Read, observe and follow this manual and the associated documents, in particular the safety and warning instructions.

1.2 Associated documents

Operating instructions for the optional accessories (see Chapter 10.3., p. 28)

1.3 Warning instructions and signal words

Signal word	Danger level	Consequences of non-observance
DANGER	Immediately imminent danger	Death, serious physical injury
WARNING	Possible imminent danger	Death, serious physical injury possible
CAUTION	Possible dangerous situation	Minor physical injury possible
NOTICE	Possible damaging situation	Property damage / environmental damage

2 Safety

2.1 Intended use

Use the bursting disc and/or bursting disc holder exclusively according to the technical specification.

2.2 Product safety

- The product is manufactured according to the state of the art and the recognised safety rules. Nevertheless, its use may result in danger to the life and limb of the user or third parties or damage to the product and other property.
- Only install and operate the product in technically perfect condition and as intended, in a safety-conscious and hazard-aware manner, observing these instructions.
- Read this manual and all associated documents completely before use, keep them completely legible and keep them accessible for personnel at all times.
- Refrain from any way of working that endangers personnel or uninvolved third parties.

- In addition, comply with the statutory and locally applicable safety and accident prevention regulations as well as the applicable standards and guidelines of the respective operating country.

2.3 Operator obligations

Only install and operate the product in technically perfect condition and as intended, in a safety-conscious and hazard-aware manner, observing these instructions.
Ensure compliance, implementation and monitoring:

- Intended use
- Statutory and locally applicable safety and accident prevention regulations of the respective operating country for the use
- Applicable safety regulations for handling hazardous substances
- Inform authorised personnel and observe regulations
- Applicable standards and guidelines of the respective operating country
- Inform authorised personnel and observe regulations
- Timely and proper performance of tests, approvals, records of operation and reports of malfunctions required by official bodies
- Provide sufficient personal protective equipment and work using it.
- Ensure professional equipotential bonding for installations in potentially explosive atmospheres.

2.4 Personnel qualification

All work in all operating phases must only be carried out by trained and authorised technical specialist personnel. Ensure that personnel assigned to work on the product have read and understood this manual and all associated documents before starting work, in particular the safety, maintenance and repair information. Regulate responsibilities, competences and supervision of the personnel.

2.5 Conversions, repair, changes

Obtain the manufacturer's consent before conversion work, repair work or changes. Use only original parts or parts approved by the manufacturer.

2.6 Personnel obligations

Depending on the hazard at the place of use, use personal protective equipment, including:

- Safety shoes
- Safety helmet
- Safety goggles
- Protective gloves
- Hearing protection
- Safety harnesses

3 Design, function and marking

3.1 Design

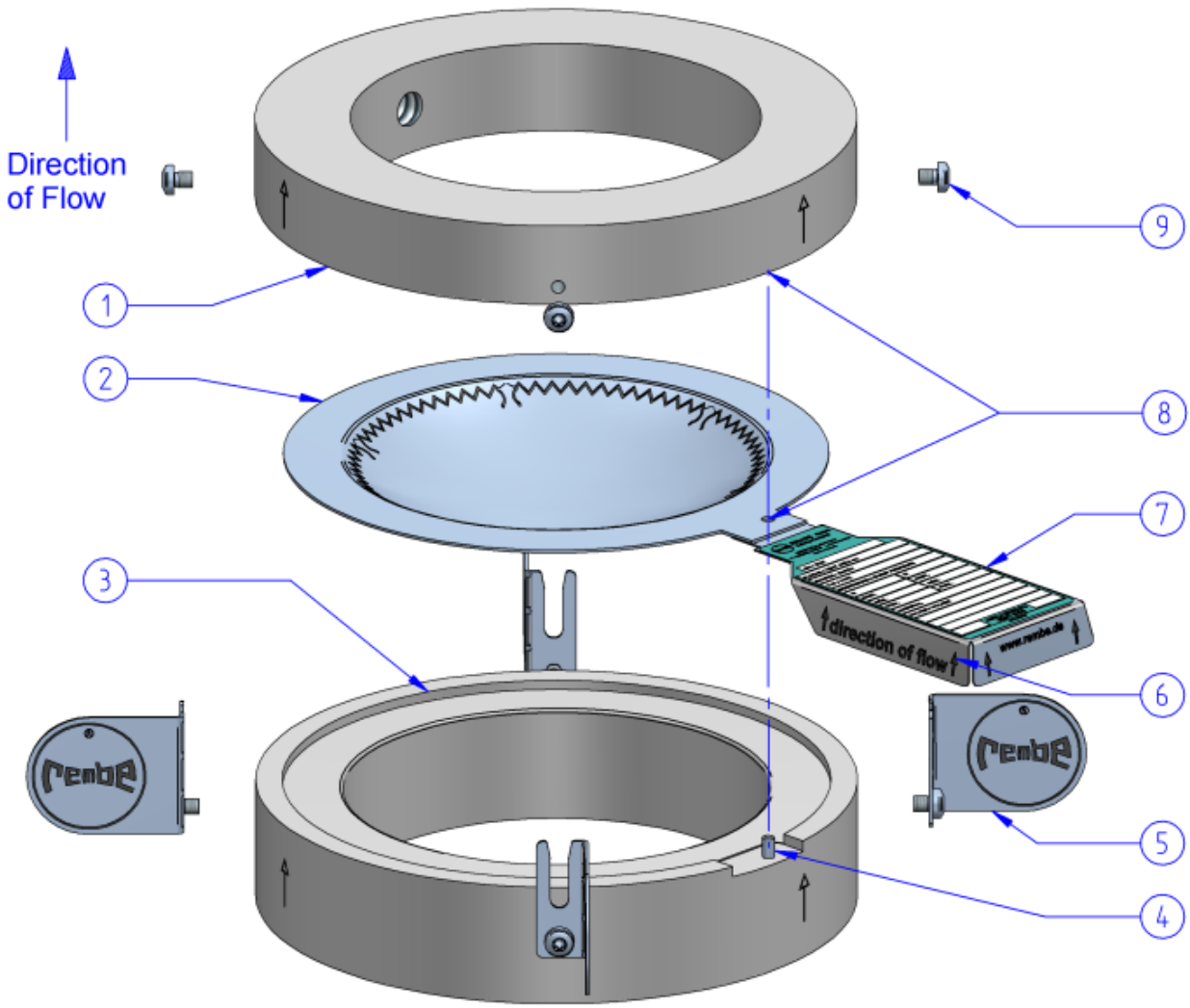

1	Bursting disc holder outlet part
2	Bursting disc
3	Bursting disc holder inlet part
4	Centring pin
5	Pre-assembly plates
6	Directional arrow
7	Nameplate
8	Hole for centring pin
9	Screws

3.2 Function

Protection system for safeguarding pressurised systems. Upon reaching the specified pressure, the bursting disc opens and, depending on the application, discharges heat, flames, liquids, gases or solid parts. The discharge can occur suddenly under high pressure and with considerable noise.

3.3 Marking

3.3.1 Nameplate

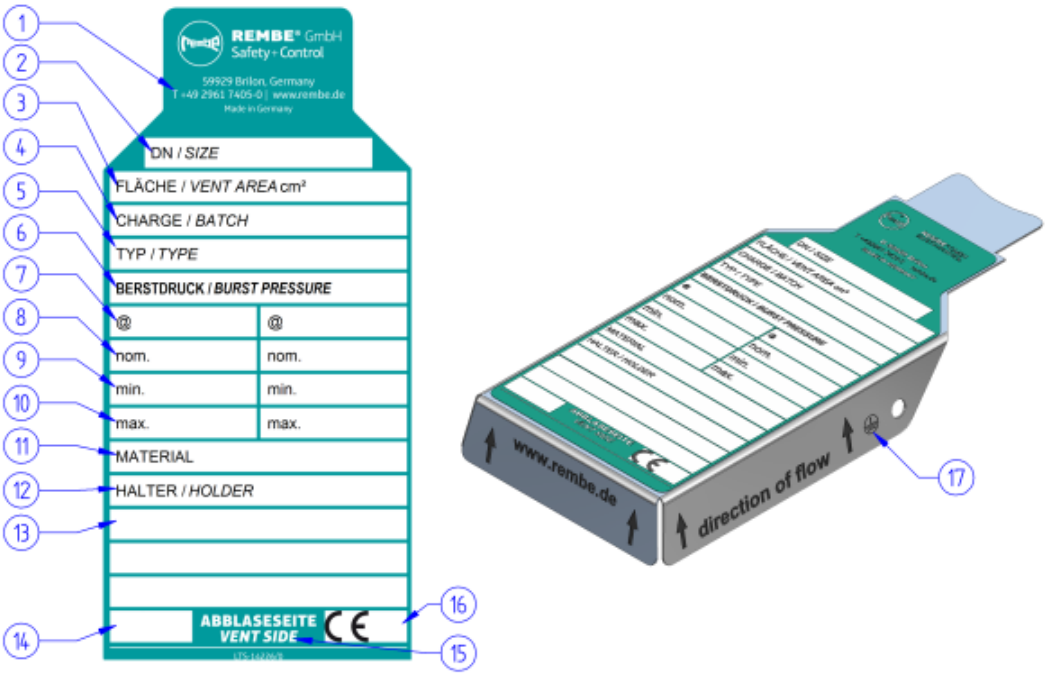

1	Manufacturer's address
2	Nominal size
3	Relief area
4	Batch number including year of manufacture
5	Type designation
6	Burst pressure
7	Temperature specification
8	Nominal bursting pressure
9	Minimum bursting pressure
10	Maximum bursting pressure
11	Material
12	Flange/installation system
13	Customer marking (optional)
14	Valid standards and marking
15	Marking of the discharge side
16	CE mark
17	Earthing connection

3.3.2 Marking of the bursting disc holder

Each bursting disc holder is provided with the following markings on the outside:

- Manufacturer's mark
- Type identification
- Pressure rating

- Nominal size
- Material no. or material designation

3.3.3 Valid types of bursting disc

There are numerous bursting disc variants. The table shows an extract of common variants. Depending on the application, other types are available. The nominal size in inches is added to the type designation. Example: BT-KUB®-2: Buckling pin reverse bursting disc with nameplate in nominal diameter 2″ (DN 50).

Type	Type description
BT-KUB®	Nameplate, buckling pin reverse bursting disc
BT-SKKUB®	Nameplate, buckling pin reverse bursting disc, integrated signal transmitter SK
BT-SIKUB®	Nameplate, buckling pin reverse bursting disc, non-invasive signal transmitter NIMU

3.3.4 Valid types of bursting disc holder

There are numerous bursting disc holder variants. The table shows an extract of common variants. Depending on the application, other types are available. The nominal size in inches is added to the type designation. Example: IG-KUB®-S-2: Bursting disc holder for bursting disc BT-KUB® with a threaded hole in nominal diameter 2″ (DN 50).

Type*	Type description
IG-KUB®	Standard
IG-KUB®-S, IG-KUB®-SS	With lateral threaded hole in the outlet part, one (S) or two (SS) holes, version BT-SKKUB® with integrated cable gland
IG-KUB®-SH	Special height (see Chapter 10.1.1, p. 20)
IG-KUB®-F, IG-KUB®-FF	With tongue, on one or both sides
IG-KUB®-N, IG-KUB®-NN	With groove, on one or both sides
IG-KUB®-FN	With tongue in the outlet part and groove in the inlet part
IG-KUB®-NF	With groove in the outlet part and tongue in the inlet part
IG-KUB®-V, IG-KUB®-VV	With raised face, on one or both sides
IG-KUB®-R, IG-KUB®-RR	With recessed face, on one or both sides
IG-KUB®-RJ	With ring type joint face, on one side
IG-KUB®-RJRJ	With ring type joint face, on both sides
IG-KUB®-T	With lateral blind hole, version BT-SIKUB® with non-invasive signal transmitter NIMU
* further combinations of F= tongue, N= groove, V= raised face, R= recessed face and RJ= ring type joint face possible	

3.3.5 Valid standards and guidelines

Standards	Description of the standard
PED 2014/68/EU (formerly 97/23/EC) and AD 2000 data sheets et seq.	Pressure Equipment Directive and AD 2000 regulations
DIN EN ISO 4126	Safety devices against excessive pressure
ASME Section VIII, Division 1	Regulations for the design, manufacture and testing of pressure vessels

Standards	Description of the standard
Depending on the country of application, further standards and guidelines may apply in addition to the valid standards and guidelines listed here. A general overview of valid certifications can be found at www.rembe.de.	

4 Transport and storage

4.1 Transport

⚠ DANGER

Risk of crushing!

Death or crushing of limbs due to falling transport load.

- ▶ Select lifting gear according to the weight to be transported.
- ▶ Do not stand under suspended loads.
- ▶ Secure the transport route.
- ▶ Lift and transport the bursting disc and/or bursting disc holder properly.

NOTICE

Property damage due to improper transport!

Risk of property damage.

- ▶ Unpack the bursting disc and/or bursting disc holder carefully upon delivery and check for transport damage.
- ▶ Report transport damage to the carrier immediately.

4.2 Storage

NOTICE

Improper storage.

Risk of property damage.

- ▶ Store the bursting disc holder and/or bursting disc in the original packaging.
- ▶ Ensure that the storage room is dry, frost-free and vibration-free.

5 Installation

5.1 General conditions for installation

- Design and application must comply with the Pressure Equipment Directive 2014/68/EU (formerly 97/23/EC) for pressures higher than 0.5 bar. Pressure relief must occur at the latest when the maximum allowable operating pressure is reached. The minimum relief area in the piping system must be able to safely discharge the required discharge capacity.
- It is mandatory to vent the bursting disc into a safe area that is marked according to the hazard potential.

- Install the bursting disc so that the pressure relief does not occur into a fire or explosion hazard area.
- Ensure that no danger to persons or property can occur due to escaping media or fragments.
- Install the bursting disc so that danger to safety-critical system parts is excluded.
- If possible, install the bursting disc so that the pressure relief does not occur into operating rooms.
- If possible, install the bursting disc so that escaping heat, flames, liquids, gases or solid parts are diverted in a controlled manner into a safe area. The system must be sufficiently dimensioned. Depending on the application, the system must be pressure, heat and fire resistant.
- Install the bursting disc so that no deposits of dust or other media are possible upstream of the bursting disc.
- If possible, install the bursting disc so that the nameplate is easily accessible and recognisable.
- The direction of flow must correspond with the directional arrow on the bursting disc holder and on the nameplate. The direction of flow is the direction in which the pressure escapes when the bursting disc bursts.
- In the case of a combined installation of a bursting disc and a safety valve or several bursting safety devices in series, the space between the safety devices must be provided with a device (e.g. vent valve) to prevent an impermissible pressure build-up. Otherwise, any back pressure that may arise can change the response pressure of the safety device facing the process.
- Ensure that there is always only one bursting disc in the bursting disc holder.
- If there are several bursting discs in the bursting disc holder, the protective function is impaired.

5.2 Inserting the bursting disc into the bursting disc holder

NOTICE

Improper assembly.

Risk of property damage.

▶ Only handle the bursting disc by the nameplate or the edge.

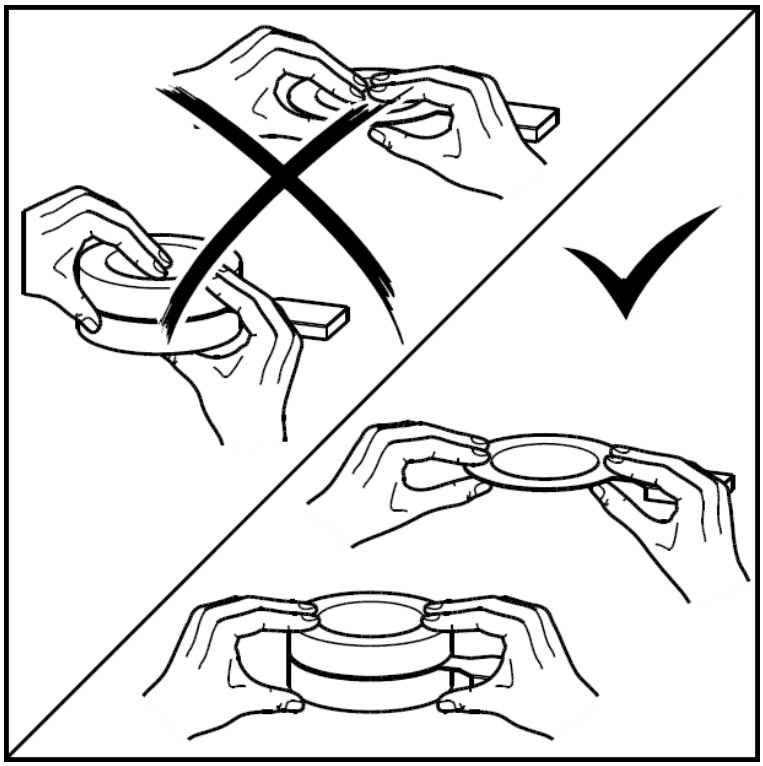

1. Screw the pre-assembly plates to the inlet part with one screw each.
2. Place the bursting disc carefully into the inlet part. In doing so, ensure that the hole and centring pin are correctly aligned. The inlet part automatically centres the bursting disc.
3. Fit the outlet part. In doing so, ensure that the hole and centring pin are correctly aligned with each other.
4. Ensure that the information on the nameplate regarding the direction of flow corresponds with the intended discharge side. The discharge side is the side to which the pressure escapes during bursting.
5. Screw the pre-assembly plates to the outlet part with one screw each.

5.3 Installing the bursting disc with bursting disc holder into the system

✓ Suitable gaskets between the flange and the bursting disc holder are present. Take the torques from the information provided by the manufacturer of the screws. Consider the gaskets used when designing the torque. Follow the specifications of the system manufacturer for this. **DANGER! Fatal injuries due to pressure increase if installed against the direction of flow! Ensure that the bursting disc is installed in the direction of flow.**

1. Insert the bursting disc holder with bursting disc between the flanges so that the directional arrow on the bursting disc holder and the nameplate corresponds with the direction of flow.
2. Place and centre gaskets (on-site) between the flanges and the bursting disc holder.
3. Ensure that the bursting disc holder sits plane-parallel between the facings of the flanges and is not tilted.
4. Insert suitable screws through the holes of the flanges.
5. Centre the bursting disc holder between the screws.
6. Place a nut on each screw.
7. Tighten nuts finger-tight.
8. Loosen the screws of the pre-assembly plates on the inlet and outlet parts until they sit loosely and can be rotated in the thread. These screws only serve for fixation during installation. They have no function during operation. Screws that are tightened too firmly can distort the torques when tightening the screws. **NOTICE! Property damage due to tightening with incorrectly designed or incorrect torque! Incorrect torques can damage the bursting disc. Design correct torques. Use a torque wrench.**
9. Tighten the screws with the correct torque incrementally in a crosswise pattern. Take the torques from the information provided by the manufacturer of the screws. Consider the gaskets used when designing the torque. Follow the specifications of the system manufacturer for this.
10. Check tightness according to the specifications of the system manufacturer.
11. Check the torques of the screws regularly:

6 Commissioning the system with the bursting disc

✓ Process safety is ensured: The corresponding areas of the system, the workstations and work equipment have been checked and the test result has been documented.

1. Ensure that the instructions described in the operating manual are followed and the prescribed conditions are maintained.
2. Document the result of the test.
3. Follow the requirements of the Industrial Safety Regulation.
4. Never close the inlet and outlet lines of the bursting disc, as otherwise no pressure relief can occur.

7 Measures after a trigger

7.1 Securing the danger area

⚠ DANGER

Risk of injury

Due to escaping media.

- ▶ Shut down the system.
- ▶ Secure the danger area.
- ▶ Alarm security forces immediately.
- ▶ If necessary, wear protective clothing.
- ▶ Secure the danger area with barrier tape.
- ▶ Handle escaped media and combustion products according to the specifications of the manufacturer and the safety data sheets.

7.2 Replacing the bursting disc

⚠ CAUTION

Risk of injury!

Cut injuries due to sharp edges of the burst bursting disc.

- ▶ Wear protective gloves and, if necessary, further PPE.

- ✓ Wear protective gloves and, if necessary, further PPE.
- ✓ System switched off / depressurised and secured against accidental restarting.
- ✓ System does not contain any medium.
- ✓ A new, suitable original replacement bursting disc is available.

1. Disassemble the bursting disc professionally.
2. Dispose of the bursting disc professionally.
3. Clean facings carefully with a clean, soft cloth.
4. Clean the inlet and outlet parts of the bursting disc holder as well as the edges of the bursting disc carefully with a soft and clean cloth. The bursting disc holder can be reused if it is undamaged.
5. Install the new, suitable original replacement bursting disc professionally.

8 Maintenance and servicing

8.1 Testing

- ✓ System switched off / depressurised and secured against accidental restarting.
- ✓ System does not contain any medium. **NOTICE! Depending on the application, the specified intervals may be shortened or extended.**

1. Carry out maintenance according to the table:

Interval	Task
Six-monthly	Check the torques of the screws, retighten if necessary.
Annually	Check the bursting disc and bursting disc holder for contamination or visible damage, e.g. corrosion, mechanical damage in the form of deformation, cracks etc.
As required	Clean the bursting disc and/or bursting disc holder. Replace the bursting disc and/or bursting disc holder.

8.2 Cleaning

⚠ DANGER

Risk of injury!

Severe injuries due to influence on the bursting pressure in the event of deposits on the bursting disc!

- ▶ Clear the bursting disc of deposits.
- ▶ Disassemble the bursting disc professionally.
- ▶ Carefully clean the outside and inside with a soft, dry cloth.
- ▶ Install the bursting disc professionally.

NOTICE

Deposits impair the triggering behaviour of the bursting disc and thus the protective function.

✓ Clear the bursting disc of deposits.

1. Disassemble the bursting disc professionally.
2. Carefully clean the outside and inside with a soft, dry cloth.
3. Install the bursting disc professionally.

9 Disposal

9.1 Disassembly

✓ System switched off / depressurised and secured against accidental restarting.

✓ System does not contain any medium.

1. Tighten the screws of the fastening tabs.
2. Loosen all screws.
3. Remove the bursting disc with the bursting disc holder.
4. Loosen the screws of the fastening tabs.
5. Remove the bursting disc from the bursting disc holder.

9.2 Disposal

Recycle materials separately and dispose of them according to locally applicable regulations.

10 Appendix

10.1 Technical data

10.1.1 Bursting disc holder IG-KUB for flanges according to EN 1092-1 Type 11 and DIN 2632 et seq.

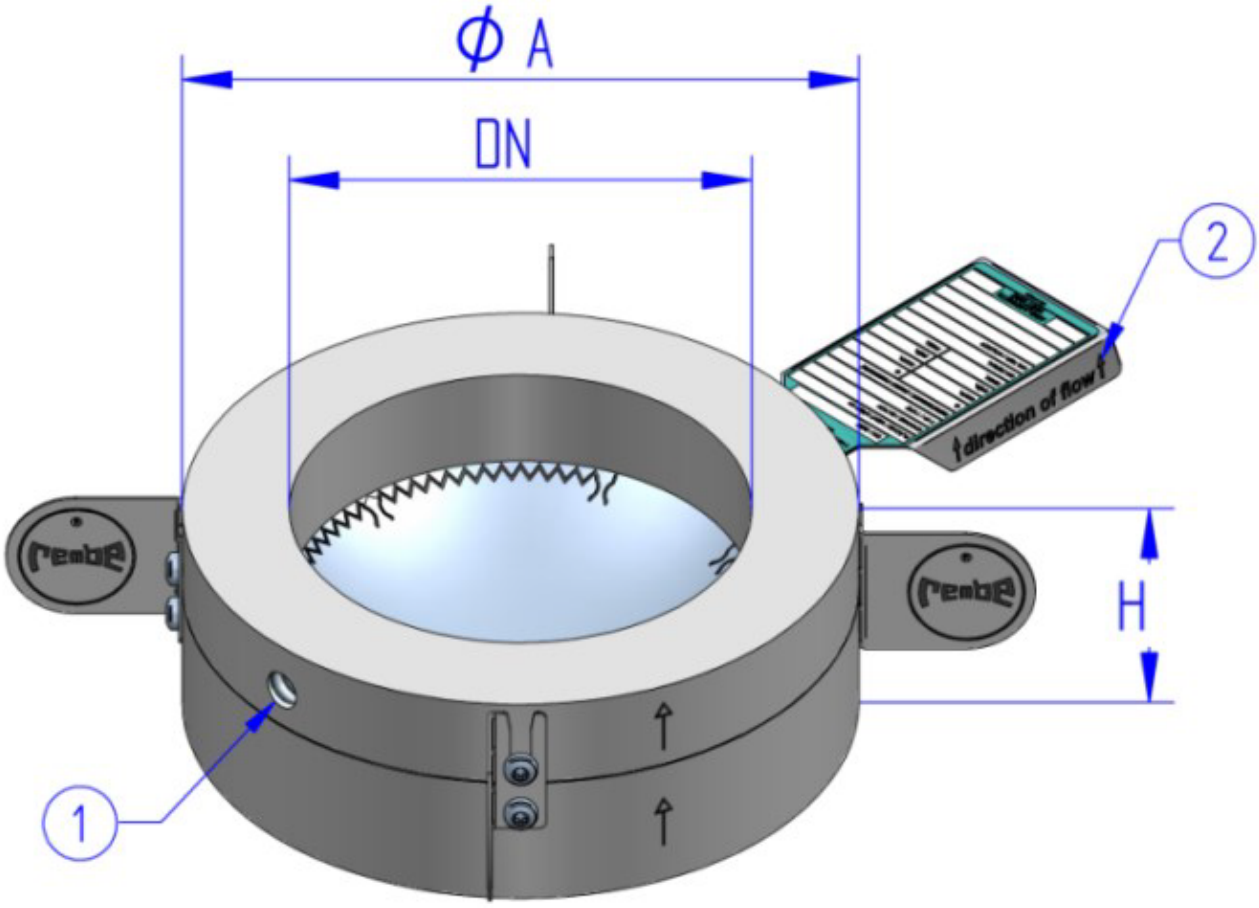

ØA	Diameter of the bursting disc holder
H	Installation height*
1	Bore
2	Flow direction indicator
* A bursting disc thickness of 2 mm is taken into account for the specified installation heights. The thickness of the bursting disc may vary depending on pressure and type.	

** For special bursting disc holders:
For height of the bursting disc holder H, see figure above

Form D (EN 1092-1, type 11)	
Groove in the outlet part and hole	+ 5 mm
Groove in the inlet part and hole	+ 5 mm
Ring Type Joint Face (RJ) (ANSI ASME B16.5 ≤ DN 600 / ASME B 16.47 Series A > DN 600)	
RJ in the inlet part	+ 5 mm
RJ in the outlet part	+ 5 mm
RJ inlet part and outlet part	+ 10 mm

Form D (EN 1092-1, type 11)	
RJ inlet part and max. ¼" hole	+ 15 mm
RJ outlet part and max. ¼" hole	+ 15 mm
RJ inlet part and max. ½" hole	+ 20 mm
RJ outlet part and max. ½" hole	+ 20 mm
The following generally applies	
for > ¼" hole in the inlet part	+ 10 mm
for > ¼" hole in the outlet part	+ 10 mm
for > ¼" hole in the inlet and outlet part	+ 20 mm

DN [mm]	NPS [in]	PN	ØA [mm]	H [mm]	Quantity of screws	Recommended screws
20	¾	10 / 16 / 25 / 40	61	41	4	M12
25	1	10 / 16 / 25 / 40	71	46	4	M12
		64 (63) / 100	82	46	4	M16
32	1¼	10 / 16 / 25 / 40	82	46	4	M16
40	1½	10 / 16 / 25 / 40	92	46	4	M16
50	2	10 / 16	105	57	4	M16
		25 / 40	105	57	4	M16
65	2½	10 / 16	127	57	8 (4)	M16
		25 / 40	127	57	8	M16
80	3	10 / 16	142	60	8	M16
		25 / 40	142	60	8	M16
100	4	10 / 16	162	68	8	M16
		25 / 40	167	68	8	M20
150		10 / 16	217	80	8	M20
		25 / 40	223	80	8	M24

DN [mm]	NPS [in]	PN	ØA [mm]	H [mm]	Quantity of screws	Recommended screws
200	8	10	272	84	8	M20
		16	272	84	12	M20
		25	283	84	12	M24
		40	290	84	12	M27
250	10	10	328	91	12	M20
		16	328	91	12	M24
		25	340	91	12	M27
		40	352	91	12	M30

DN [mm]	NPS [in]	PN	ØA [mm]	H [mm]	Quantity of screws	Recommended screws
300	12	10	378	92	12	M20
		16	378	92	12	M24
		25	400	92	16	M27
		40	417	92	16	M30
350	14	10	438	104	16	M20
		16	443	104	16	M24
400	16	10	485	109	16	M27
		16	496	109	16	M27
500	20	10	594	119	20	M24
		16	617	119	20	M30
600	24	6	679	133	20	M24
		10	692	133	20	M27
		16	734	133	20	M33

DN [mm]	NPS [in]	PN	ØA [mm]	H [mm]	Quantity of screws	Recommended screws
700	28	6	784	150	24	M24
		10	810	150	24	M27
		16	804	150	24	M33
800	32	6	890	175	24	M27
		10	917	175	24	M30
		16	911	175	24	M36

10.1.2 Bursting disc holder IG-KUB for ANSI flanges according to ASME B 16.5 (<DN 600) and ASME B16.47 Series A (>DN 600)

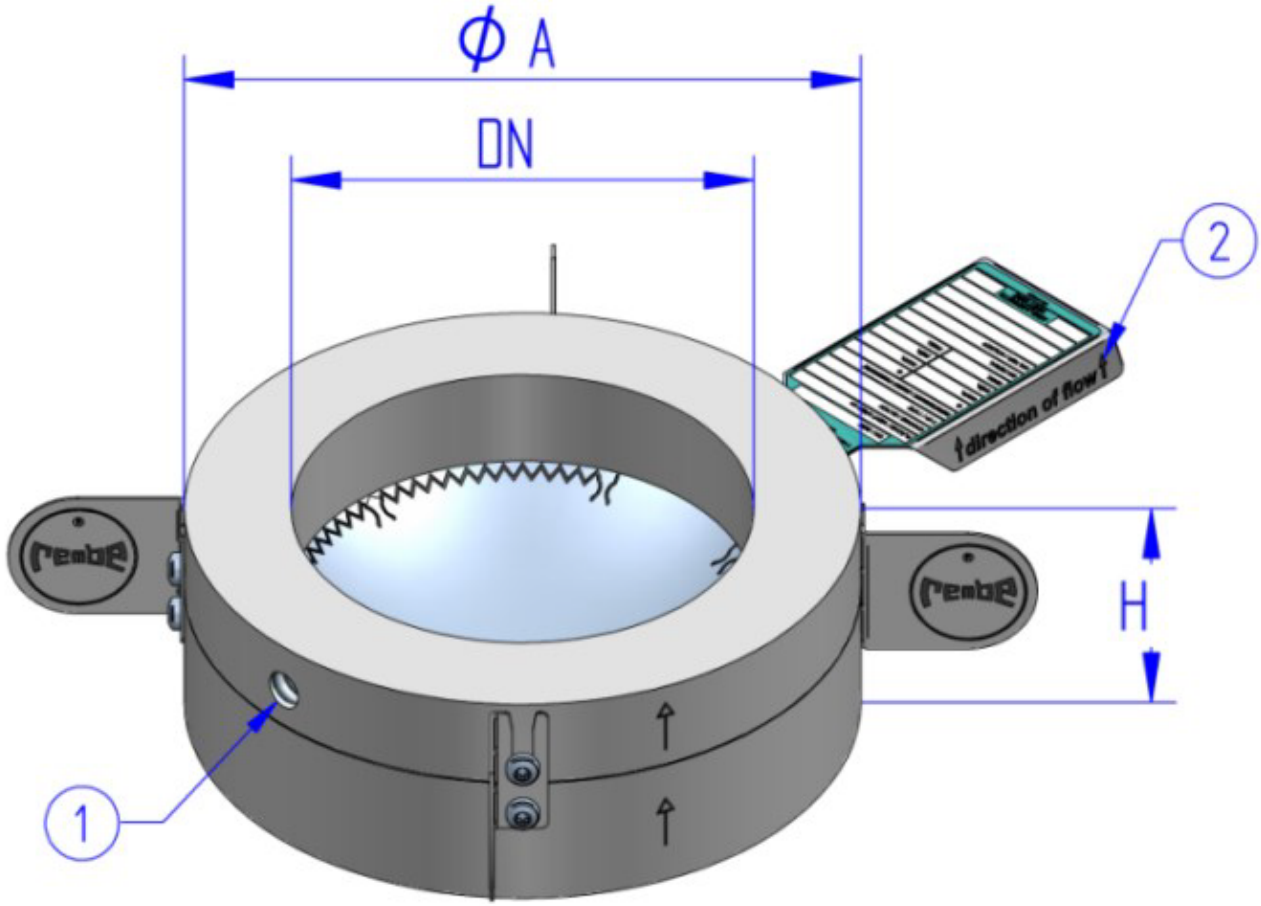

ØA	Diameter of the bursting disc holder
H	Installation height*
1	Bore
2	Flow direction indicator
* A bursting disc thickness of 2 mm is taken into account for the specified installation heights. The thickness of the bursting disc may vary depending on pressure and type.	

DN [mm]	NPS [in]	ANSI Rating [lbs]	ØA [mm]	H [mm]	Quantity of screws	Recommended screws
20	¾	300	63	41	4	⅝"
25	1	150	63	46	4	½"
		300 / 600	69	46	4	⅝"
		900 / 1500	76	46	4	⅞"
32	1¼	150	73	46	4	½"
		300 / 600	79	46	4	⅝"
		900 / 1500	85	46	4	⅞"
40	1½	150	82	46	4	½"
		300 / 600	92	46	4	¾"
		900 / 1500	95	46	4	1"

DN [mm]	NPS [in]	ANSI Rating [lbs]	ØA [mm]	H [mm]	Quantity of screws	Recommended screws
50	2	150	101	53	4	⅝"
		300 / 600	107	53	8	⅝"
		900 / 1500	139	53	8	⅞"
65	2½	150	120	57	4	⅝"
		300 / 600	127	57	8	¾"
		900 / 1500	162	57	8	1"
80	3	150	133	60	8	⅝"
		300 / 600	146	60	8	¾"
		900	165	60	8	⅞"
		1500	171	60	8	1"

DN [mm]	NPS [in]	ANSI Rating [lbs]	ØA [mm]	H [mm]	Quantity of screws	Recommended screws
100	4	150	171	68	8	⅝"
		300	177	68	8	¾"
		600	190	68	8	⅞"
		900 / 1500	203	68	8	1¼"
150	6	150	219	80	8	¾"
		300	247	80	12	¾"
		600	263	80	12	1"
200	8	150	276	84	8	¾"
		300	304	84	15	⅞"
		600	317	84	15	1⅛"
250	10	150	336	91	12	⅞"
		300	358	91	16	1"
300	12	150	406	92	12	⅞"
		300	419	92	16	1⅛"
350	14	150	447	104	12	1"
		300	482	104	20	1⅛"
400	16	150	511	109	16	1"
		300	536	109	20	1¼"

DN [mm]	NPS [in]	ANSI Rating [lbs]	ØA [mm]	H [mm]	Quantity of screws	Recommended screws
450	18	150	546	119	16	1⅛"
		300	593	119	24	1¼"
500	20	150	603	119	20	1⅛"
		300	650	119	24	1¼"
600	24	150	714	133	20	1¼"
		300	771	133	24	1½"

DN [mm]	NPS [in]	ANSI Rating [lbs]	ØA [mm]	H [mm]	Quantity of screws	Recommended screws
650	26	150	771	150	24	1¼"
		300	831	150	28	1¾"
700	28	150	828	150	28	1¼"
		300	895	150	28	1¾"
750	30	150	879	150	28	1¼"
		300	949	150	28	1⅝"
800	32	150	936	175	28	1½"
		300	1003	175	28	1¾"

11 Spare parts

Have the batch number ready for orders (see nameplate):

- Replacement bursting disc
- Replacement bursting disc holder

11.1 Optional accessories

Have the batch number ready for orders (see nameplate).
Vent valve: When installed upstream of a safety valve
Signalling for an optical or acoustic triggering signal:

- Signal cable SK
- Signal transmitter BIRD
- Signal transmitter NIMU
- Signal membrane SB-(S)

11.2 Contact

GEA AWP GmbH
Armaturenstr. 2
17291 Prenzlau
Germany
Tel.: +49 3984 8559-0
Fax: +49 3984 8559-18
info@awpvalves.com
www.awpvalves.com

Engineering for a better world.

GEA.com

GEA AWP GmbH
Armaturenstr. 2
17291 Prenzlau
Germany
phone: +49 3984 8559-0
fax: +49 3984 8559-18
e-mail: info@awpvalves.com

Latest revision: 02.02.2026
©All rights reserved. Subject to modifications. Printed in Germany.